C&K CRD Series
10mm DIP Coded Rotary Switches

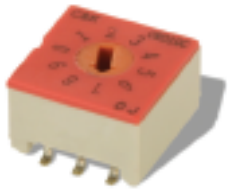

Features/Benefits

- ***Process sealed – withstands soldering and cleaning***
- ***Thru-hole and surface mount models***
- ***Crisp, positive detent ensures actuation***
- ***Computer and peripherals***
- ***Rohs compliant - options available***

Typical Applications

- ***Address switching applications***
- ***Data storage devices***
- ***Computer and peripherals***
- ***Instrumentation***

Specifications

CONTACT RATING: 0.4 V AC, DC 20 V max.

ELECTRICAL LIFE: 20,000 steps min. @ 5 V DC 10 mA.

MECHANICAL LIFE: 30,000 steps min.

CONTACT RESISTANCE: 100 milliohms max. initial @ 2 V DC 10 mA.

INSULATION RESISTANCE: 1000 megohms min. @ 100 V DC

DIELECTRIC STRENGTH: 300 V AC for 1 minute.

OPERATING TEMPERATURE: -20°C to 85°C.

STORAGE TEMPERATURE: -40°C to 85°C.

OPERATING FORCE: 1000 grams max.

PACKAGING: Switches supplied in anti-static tubes in full quantities only. This may affect order quantity. Surface mount models with MO actuators available in tape and reel, 500 pieces per reel.

Materials

COVER: (PTH) PBT red; (SMT) PPA - red (UL 94V-0).

HOUSING: (PTH) PBT green; (SMT) PPA - natural (UL 94V-0).

ACTUATOR: 4/6 nylon PA-6T (UL 94V-0).

CONTACTS: Beryllium copper with gold plating.

TERMINALS: Brass with tin-lead plate.
RoHS, Version brass with gold plate over nickel plate.

NOTE: For the latest information regarding RoHS compliance, please go to: www.ittcannon.com/rohs.

Note: Specifications and materials listed above are for switches with standard options. For information on specific and custom switches, consult Customer Service Center.

How To Order

Our easy Build-A Switch concept allows you to mix and match options to create the switch you need. Below is a complete listing of options shown in catalog. To order, simply select desired option from each category and place in the appropriate box.

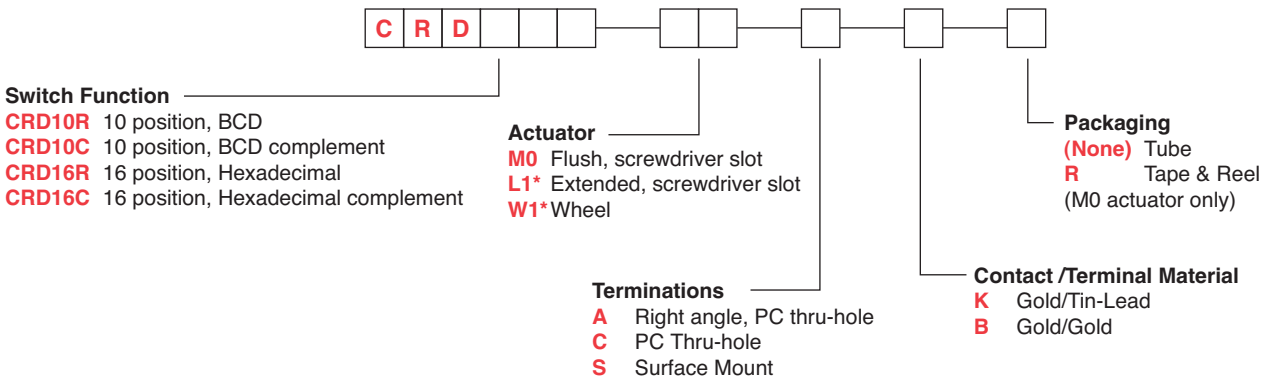

* Note - L1 and W1 actuators are not available in termination "S"

Third Angle Projection

Dimensions are shown: Inch (mm)
Specifications and dimensions subject to change

SWITCHES WITH STANDARD OPTIONS

PC Mount

PART NUMBER	NO. POS.	QUANTITY PER TUBE
CRD10RM0CK	10	45
CRD16RM0CK	16	45

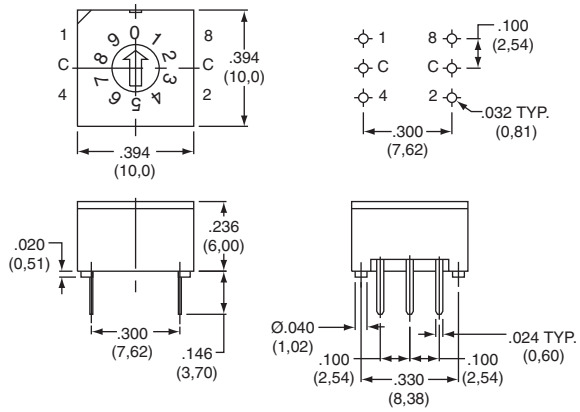

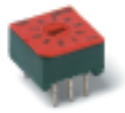
CRD10RM0CK

Right Angle Mount

PART NUMBER	NO. POS.	QUANTITY PER TUBE
CRD10RM0AK	10	35
CRD16RM0AK	16	35

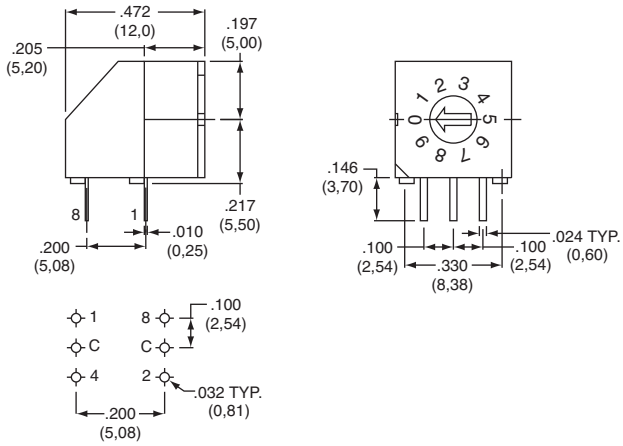

Surface Mount

PART NUMBER	NO. POS.	QUANTITY PER TUBE
CRD10RM0SK	10	45
CRD16RM0SK	16	45

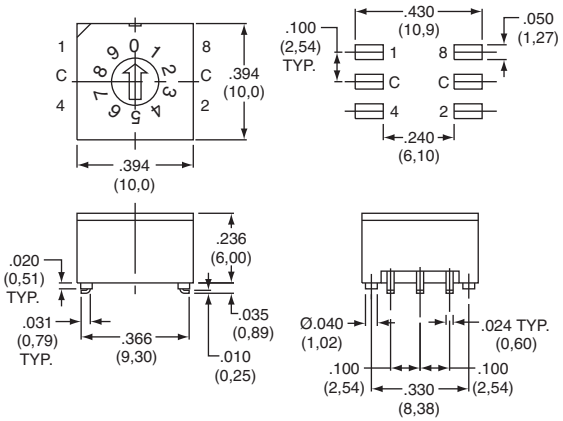

Third Angle Projection

Dimensions are shown: Inch (mm)
Specifications and dimensions subject to change

C&K CRD Series
10mm DIP Coded Rotary Switches

SWITCH FUNCTION

CRD10R
10 POSITION, BCD
ACTUATOR COLOR: RED

POS.	0	1	2	3	4	5	6	7	8	9
C	●	●	●	●	●	●	●	●	●	●
1		●		●		●		●		●
2			●	●			●	●		
4					●	●	●	●		
8									●	●

CRD10C
10 POSITION, BCD COMPLEMENT
ACTUATOR COLOR: ORANGE

POS.	0	1	2	3	4	5	6	7	8	9
C	●	●	●	●	●	●	●	●	●	●
1	●		●		●		●		●	
2	●	●			●	●			●	●
4	●	●	●	●					●	●
8	●	●	●	●	●	●	●	●		

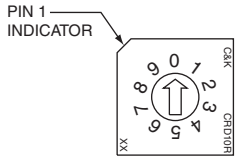

CRD16R
16 POSITION, HEXADECIMAL
ACTUATOR COLOR: BLACK

POS.	0	1	2	3	4	5	6	7	8	9	A	B	C	D	E	F
C	●	●	●	●	●	●	●	●	●	●	●	●	●	●	●	●
1		●		●		●		●		●		●		●		●
2			●	●			●	●			●	●			●	●
4					●	●	●	●					●	●	●	●
8									●	●	●	●	●	●	●	●

CRD16C
16 POSITION, HEXADECIMAL COMPLEMENT
ACTUATOR COLOR: WHITE

POS.	0	1	2	3	4	5	6	7	8	9	A	B	C	D	E	F
C	●	●	●	●	●	●	●	●	●	●	●	●	●	●	●	●
1	●		●		●		●		●		●		●		●	
2	●	●			●	●			●	●			●	●		
4	●	●	●	●					●	●	●	●				
8	●	●	●	●	●	●	●	●								

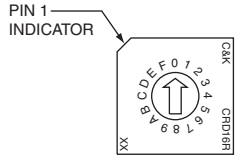

ACTUATOR

M0
(STD.) FLUSH WITH SCREWDRIVER SLOT

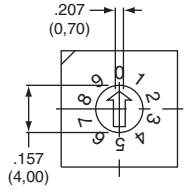

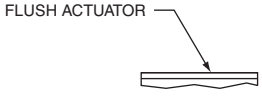

L1*
EXTENDED WITH SCREWDRIVER SLOT

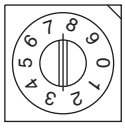

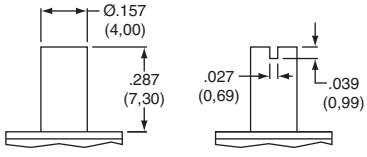

W1*
WHEEL

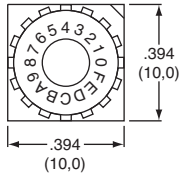

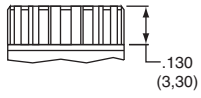

NOTE: Designed for #0 Phillips screwdriver.

* L1 and W1 actuators are not available in termination “S”

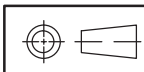

Dimensions are shown: Inch (mm)
Specifications and dimensions subject to change

TERMINATIONS

C PC THRU-HOLE

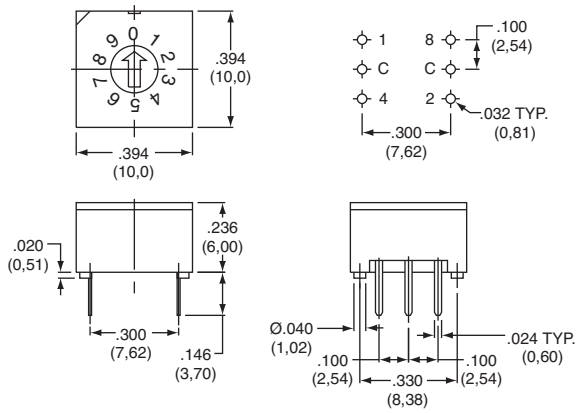

A RIGHT ANGLE, PC THRU-HOLE

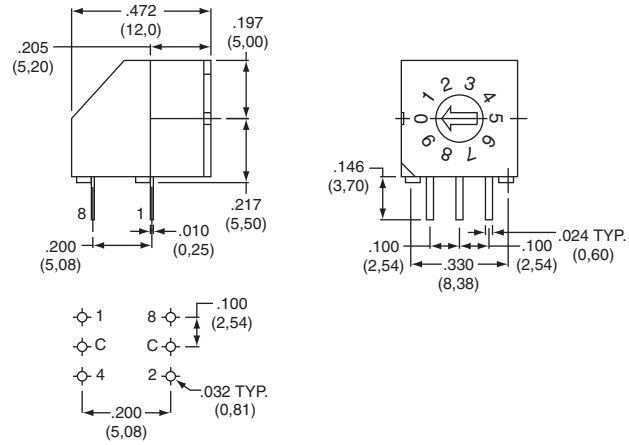

S SURFACE MOUNT

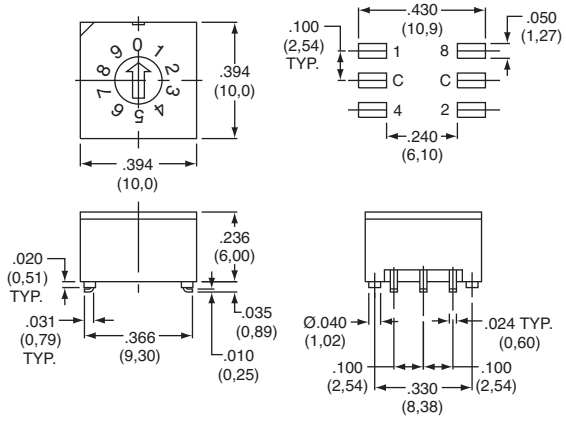

CONTACT MATERIAL

OPTION CODE	RoHS COMPLIANT*	RoHS COMPATIBLE*	CONTACT MATERIAL	TERMINAL PLATING	RATING	
K	NO	YES	GOLD	TIN-LEAD	LOW LEVEL/DRY CIRCUIT	0.4 VC MAX. @ 20 V AC or DC MAX.
B	YES	YES	GOLD	GOLD	LOW LEVEL/DRY CIRCUIT	0.4 VC MAX. @ 20 V AC or DC MAX.

* Note: See Technical Data section of this catalog for RoHS compliant and compatible definitions and specifications.

TAPE & REEL

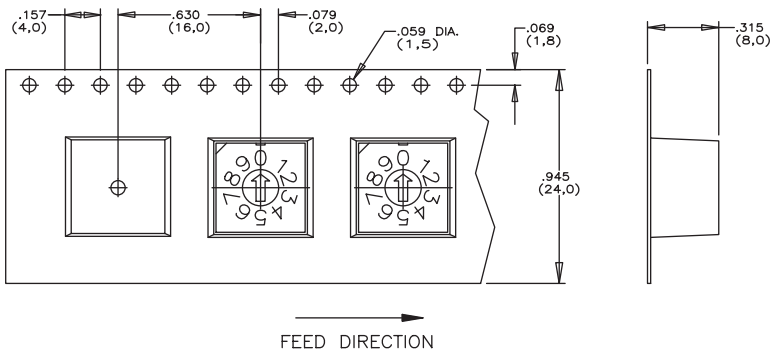

Third Angle Projection

Dimensions are shown: Inch (mm)
Specifications and dimensions subject to change