EE06 Series

Small Size Transmitter for Humidity and Temperature

EE06 series are compact transmitters for humidity, and combined humidity/temperature measurement with excellent price / performance ratio.
They are optimised for OEM applications and available with or without housing. With appropriate filter cap EE06 can operate successfully even in harsh environments.
The analogue output for both humidity and temperature is 0-1 V.
The temperature output signal can be active or passive.
The very small dimensions, low energy consumption and supply voltages down to 4.5 V allow cost-effective and easy positioning of the transmitters.

Typical Applications

humidifiers and dehumidifiers
climate controls in museums, hotels
monitoring of storage rooms
photostatic machines control
meteorological applications

Features

very small dimensions
excellent price-performance-ratio
long term stability
easy installation
low energy consumption

Technical Data

Measuring values

Relative humidity

Sensor	HC101			
Output appropriate 0...100% RH	0-1 V	-0.2 mA < I_L < 0.2 mA		
Working range	model A	0...100% RH	model C	0...100% RH
	model B	0...95% RH		
Accuracy at 20°C (68°F), 12V DC	±3% RH (0...95% RH)			
Temperature dependence model F/FT	d RH = -0.00035 x RH x (T-20°C)			
model FP	d RH = typ. (-0.003 x RH + 0.01) x (T-20°C)			

Temperature (active output)

Sensor	Pt1000 (class A, DIN EN 60751)			
Output appropriate -40...60°C (-40...140°F)	0-1 V	-0.2 mA < I_L < 0.2 mA		

Accuracy at 12V DC

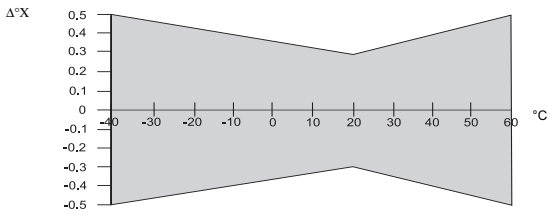

Temperature (passive output)

Type of T-Sensor	please see ordering guide

General

Supply voltage	4.5V DC - 30V DC		
Current consumption	typ. 1.5 mA		
Housing	Polycarbonat / IP65 (Model A) in vertical mounting (filter cap upside)		
Sensor protection	membrane filter, plastic grid, metal grid filter		
Electromagnetic compatibility	EN 61000-6-3	EN 61000-6-1	CE
	FCC Part15 ClassB	ICES-003 ClassB	
Temperature range	working temperature: -40...60°C (-40...140°F)		
	storage temperature: -40...65°C (-40...149°F)		

Housing dimensions (mm)

1 mm = 0.03937” / 1” = 25.4 mm

Type A

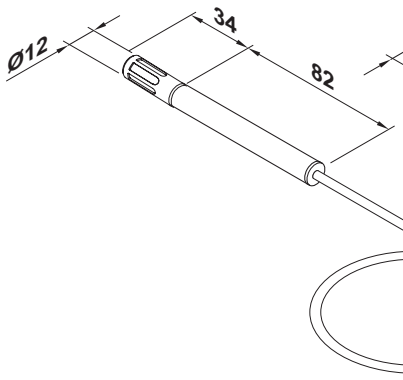

cable length standard = 500mm (19.7”)

Type B

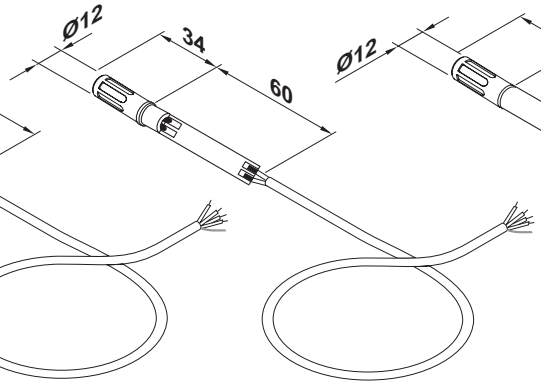

cable length standard = 200mm (7.9”)

Type C

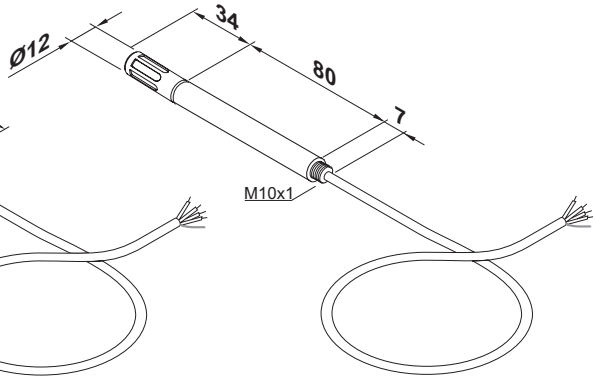

cable length standard = 500mm (19.7”)

Connection Diagram

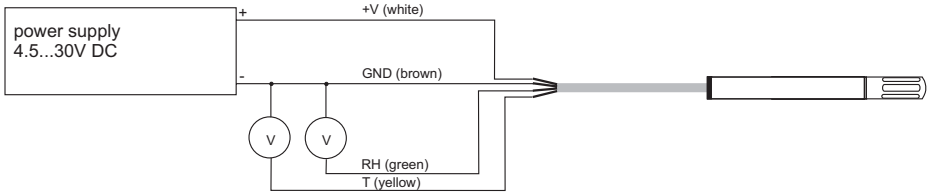

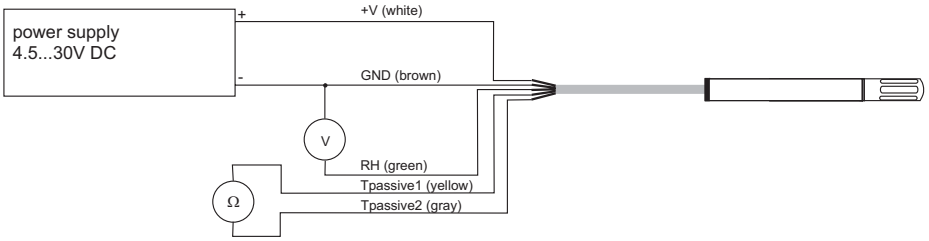

Ordering Guide

MODEL	OUTPUT	T-SENSOR (only passive)	TYPE	FILTER	CABLE LENGTH (Type A + C)
humidity and temperature (FT)	0 - 1 V (1)	Pt 100 DIN A (A)	with housing (A)	membrane filter (1)	0.5m (1.6ft) (no code)
humidity (F)		Pt 100 DIN B (B)	without housing (B)	plastic grid (4)	1.5m (4.9ft) (K150)
humidity and temperature passive (FP)		Pt 1000 DIN A (C)	with thread (C)	metal grid filter (6)	3m (9.8ft) (K300)
		Pt 1000 DIN B (D)			5m (16.4ft) (K500)
		NTC 10K at 25°C (E)			10m (32.8ft) (K1000)
EE06-					

Accessories

- radiation shield (for more information please refer to data sheet “Accessories”) (HA010502)

Order Example

EE06-FT1A1-K300

model:	humidity and temperature
output:	0-1 V
housing:	with housing
filter:	membrane filter
cable length	3m (9.8ft)