GF281 Series

TOCOS® PANEL CONTROLS

28mm Diameter, Single-Turn, Cermet Industrial Panel Controls

Features

■ 28mm diameter, single-turn industrial panel controls ■ Cermet film element ■ Single and tandem units, single shaft ■ Excellent environmental characteristics ■ Linear taper ■ Shaft lock available ■ Metal shaft and bushing ■ 6mm diameter shafts in slot, flat or round end styles ■ Standard 15mm or 20mm shaft length ■ Panel mount only ■ Right angle ear-lug terminals ■ Optional 6-turn GFV281 model available as special order

Specifications

Electrical

Standard Resistance Range . . . . . 100Ω to 1MΩ

Resistance Tolerance . . . . . ±10% standard

End Resistance . . . . . 3Ω max.

Resistance Taper . . . . . B = linear

Peak Noise (C.R.V.) . . . . . 3% or 5Ω, whichever is greater

Power Rating . . . . . 2 watts at +70°C, 0 watt at +120°C

Maximum Input Voltage . . . . . 400VDC or power rating, whichever is smaller

Temperature Coefficient . . . ±100ppm/°C, 200Ω to 500kΩ ±250ppm/°C, other values

Dielectric Strength . . . . . 1,000VAC, 1 minute

Mechanical

Mechanical Travel . . . . . 295°±10°

Shaft Torque
Single Unit . . . . . 50 to 300 gf•cm (0.693 to 4.159 oz•in)
Tandem Unit . . . . . 50 to 450 gf•cm (0.693 to 6.238 oz•in)

Stop Strength . . . . . 9.2 kgf•cm (127.54 oz•in) max.

Mounting Nut Torque . . . . . 15 kgf•cm (207.94 oz•in) max.

Solderability . . . . . 235°C, 5 seconds

Marking . . . . . Model type, taper, resistance, shaft type, terminal identification, date code

Environmental

Temperature Range . . . . . −10°C to +120°C

Low Temperature Operation . . . . . −10°C, 45 minutes with rated load
ΔT/R ≦±3%

Load Life . . . . . +70°C, 1,000 hours with rated load
ΔT/R ≦±5%

Vibration . . . . . .10-55Hz, 1.5mm amplitude, 3 directions, 2 hours each
ΔT/R ≦±1%

Soldering Heat Resistance . . . . . 350°C, 3 seconds
ΔT/R ≦±2%

Rotational Life . . . . 15,000 cycles (500 cycles for shaft lock models only) without load
ΔT/R ≦±10%

ΔT/R = Total Resistance Change

GF281 Single-Turn & GFV281 6-Turn (special order)

Panel Mount, Single Unit, Single Shaft
Right Angle Ear-Lug Terminals

Unit: mm

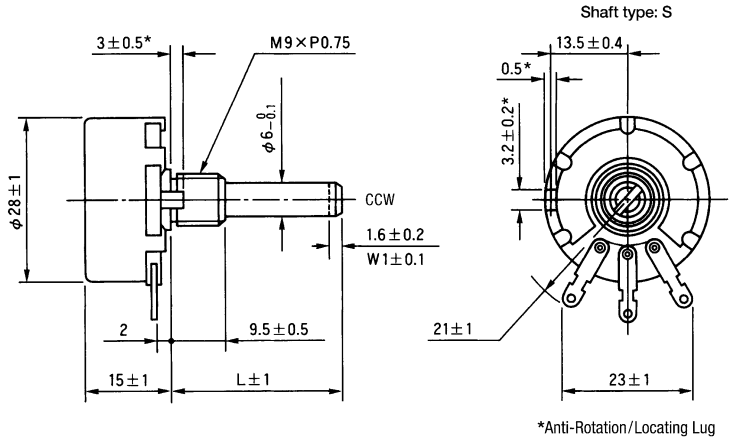

*Anti-Rotation/Locating Lug

Recommended Panel Mounting Holes

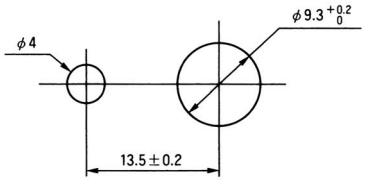

GF281L

Panel Mount, Single Unit, Single Shaft with Shaft Lock
Right Angle Ear-Lug Terminals

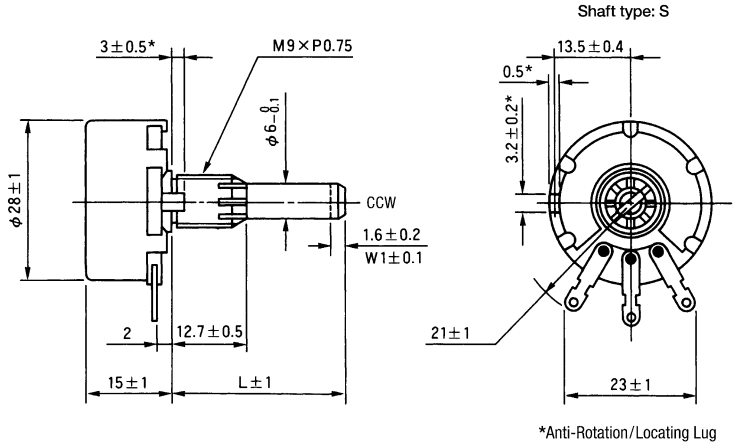

*Anti-Rotation/Locating Lug

Recommended Panel Mounting Holes

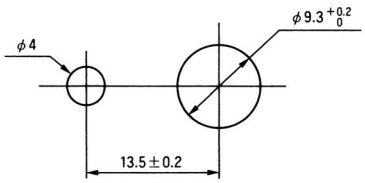

GF281G

Panel Mount, Ganged Tandem Unit, Single Shaft
Right Angle Ear-Lug Terminals on Each Unit

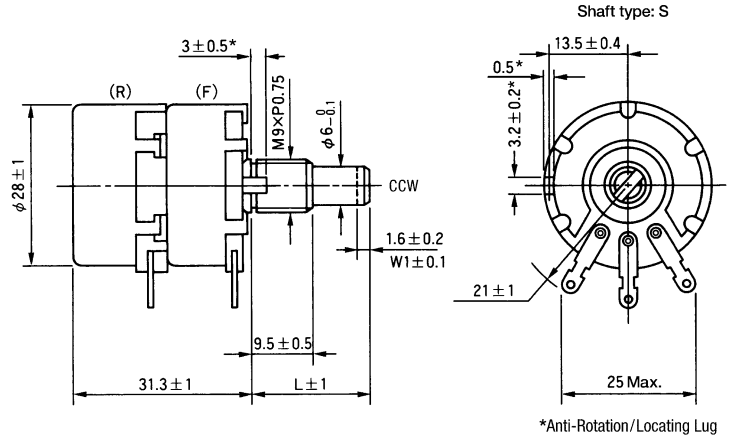

*Anti-Rotation/Locating Lug

Recommended Panel Mounting Holes

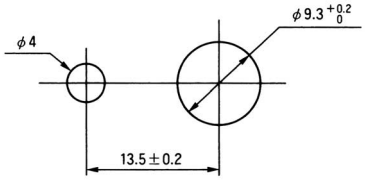

TOCOS AMERICA, INC.
1177 East Tower Road, Schaumburg, IL 60173 Tel: 847-884-6664 Fax: 847-884-6665 E-mail: sales@tocos.com www.tocos.com

GF281 Series Part Numbering System

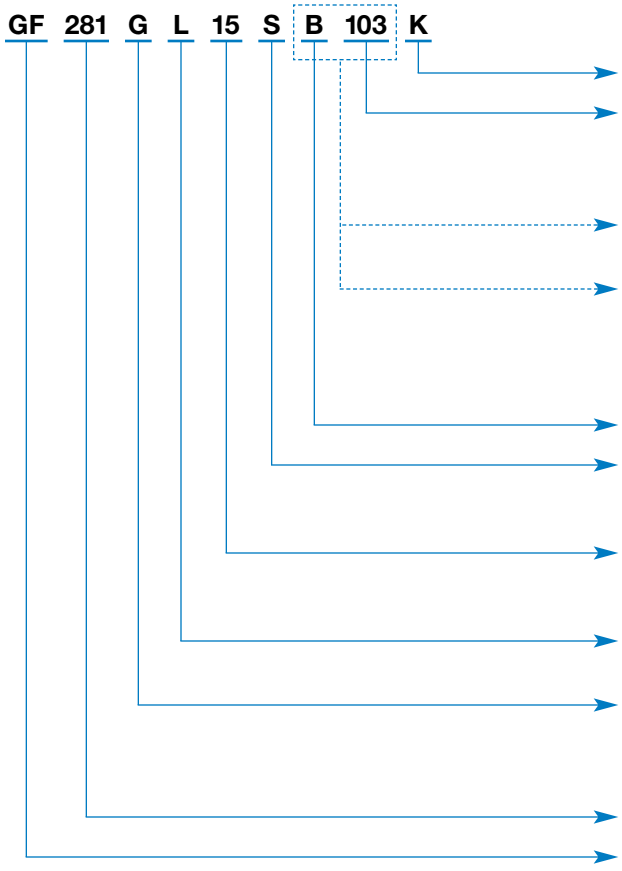

NOTE: FMS = From Mounting Surface

Resistance Tolerance: K = ±10% (standard).

Resistance Code: Expressed in ohms. A three digit code where the first two digits are significant figures, and the third digit indicates the number of zeros that follow these figures (i.e., 100 = 10Ω; 101 = 100Ω; 102 = 1,000Ω; 103 = 10,000Ω; 105 = 1,000,000Ω). *See table for standard resistance values.*

For Single Unit:
Specify taper and resistance code as shown.

For Ganged Tandem Unit:
Specify a taper code and resistance code for each unit starting with the front unit followed by the rear unit. If both units have the same taper and resistance codes, add "X2" suffix per example below.
Examples: **B103A503** or if both units are the same: **B103X2**

Resistance Taper: B = Linear.

Shaft End Style: S = Slotted.
F = Flatted.
R = Round.

Standard Shaft Length: 15 = 15mm FMS.
20 = 20mm FMS.
Up to 50mm shaft length available (special order).

Shaft Lock: L = With Shaft Lock.
Blank = Without Shaft Lock.

Style: Blank = Panel Mount, Single Unit, Single Shaft, Right Angle Ear-Lug Terminals.
G = Panel Mount, Ganged Tandem Unit, Single Shaft, Right Angle Ear-Lug Terminals on Each Unit.

Size: 281 = 28mm Diameter.

TOCOS Series Name: GF = Cermet Film Element.

Standard Resistance Values and Part Numbering Codes

Standard Nominal Total Resistance Values and Part Numbering Codes

Resistance (Ω)	Code	Resistance (Ω)	Code	Resistance (Ω)	Code	Resistance (Ω)	Code	Resistance (Ω)	Code
100	101	1,000	102	10,000	103	100,000	104	1,000,000	105
200	201	2,000	202	20,000	203	200,000	204		
500	501	5,000	502	50,000	503	500,000	504		

Refer to Shaft End Styles Specifications and Hardware Specifications for details and availability.
For additional information, refer to Guidelines and Precautions for Using Panel Controls.