# 3.0A Surface Mount Sintered Glass Passivated Rectifier

## Features

- Sintered glass passivated (SGP) rectifier chip
- Glass passivated cavity-free junction
- High forward surge current capability
- Plastic package has underwriters laboratory flammability classification 94V-0
- High temperature soldering: 260 °C / 10 seconds at terminals
- RoHS compliant

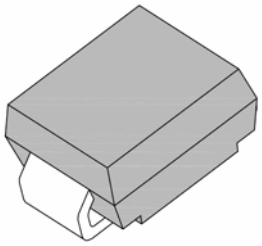

**SMB**
**(DO-214AA)**

RoHS Compliant

## Mechanical Data

| | |
|---|---|
| **Case:** | JEDEC SMB(DO-214AA) molded plastic |
| **Terminals:** | Solder plated solderable per MIL-STD-750, Method 2026 |
| **Polarity:** | Cathode end indicated by color band |
| **Weight:** | 0.004 Ounce, 0.12 gram |

## Maximum Ratings & Electrical Characteristics (*$T_{Ambient}$=25ºC unless noted*)

| Symbol | Description | GF3AB | GF3BB | GF3DB | GF3GB | GF3JB | GF3KB | GF3MB | Unit | Conditions |
|---|---|---|---|---|---|---|---|---|---|---|
| | Marking Code | GF3A | GF3B | GF3D | GF3G | GF3J | GF3K | GF3M | | |
| $V_{RRM}$ | Max. Recurrent Peak Reverse Voltage | 50 | 100 | 200 | 400 | 600 | 800 | 1000 | V | |
| $V_{RMS}$ | Max. RMS Voltage | 35 | 70 | 140 | 280 | 420 | 560 | 700 | V | |
| $V_{DC}$ | Max. DC Blocking Voltage | 50 | 100 | 200 | 400 | 600 | 800 | 1000 | V | |
| $I_{F(AV)}$ | Max. Average Rectified Current | 3.0 | | | | | | | A | |
| $I_{FSM}$ | Peak Forward Surge Current | 115 | | | | | | | A | |
| $V_F$ | Max. Instantaneous Forward Voltage | 1.0 | | | | | | | V | $I_F$=3.0A |
| $I_R$ | Max. DC Reverse Current at Rated DC Blocking Voltage | 5 | | | | | | | µA | $T_A$=25 °C |
| | | 50 | | | | | | | | $T_A$=125 °C |
| | | 100 | | | | | | | | $T_A$=150 °C |
| $C_J$ | Typical Junction Capacitance | 40 | | | | | | | pF | |
| $R_{\theta-JA}$ | Max. Thermal Resistance | 47 | | | | | | | ° C/W | |
| $R_{\theta-JL}$ | | 13 | | | | | | | | |
| $T_J$,$T_{STG}$ | Operating Junction and Storage Temperature Range | -65 to 175 | | | | | | | ° C | |

## Typical Characteristics Curves

Fig.1- Forward Current Derating Curve

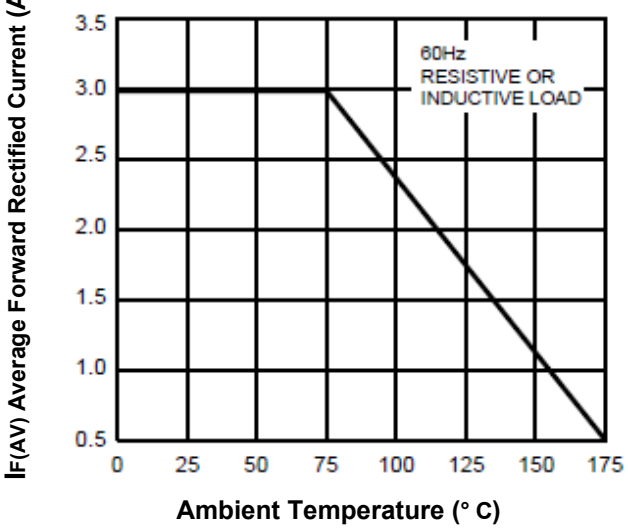


Fig.2-Max. Non-Repetitive Forward Surge Current

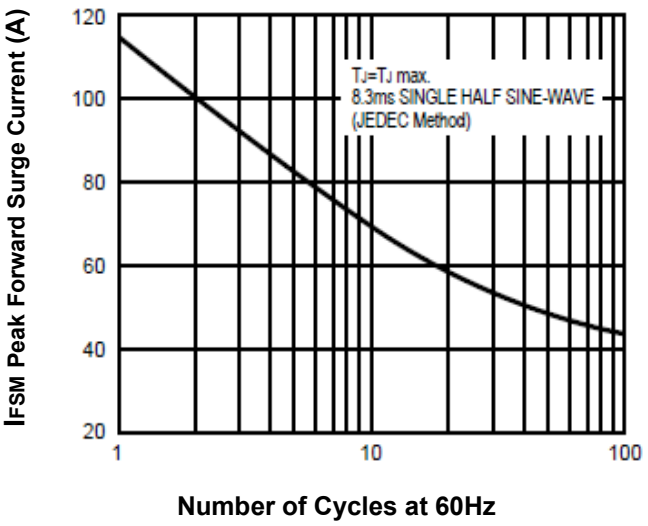


Fig.3- Typical Instantaneous Forward Characteristics

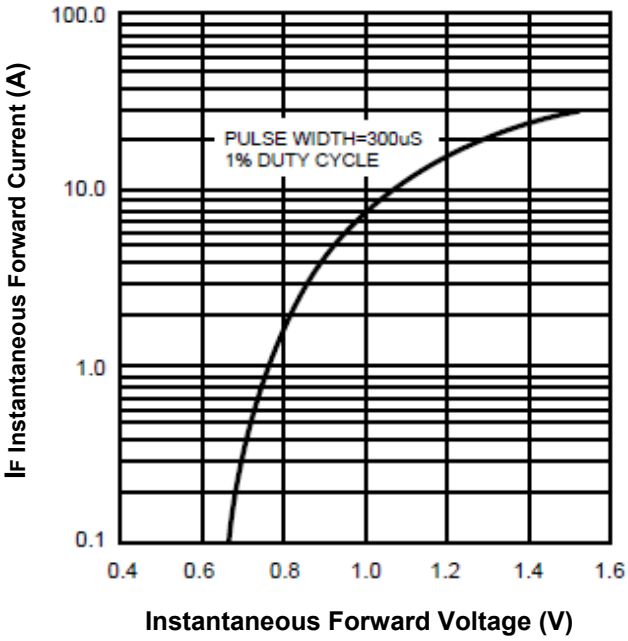


Fig.4- Typical Reverse Characteristics

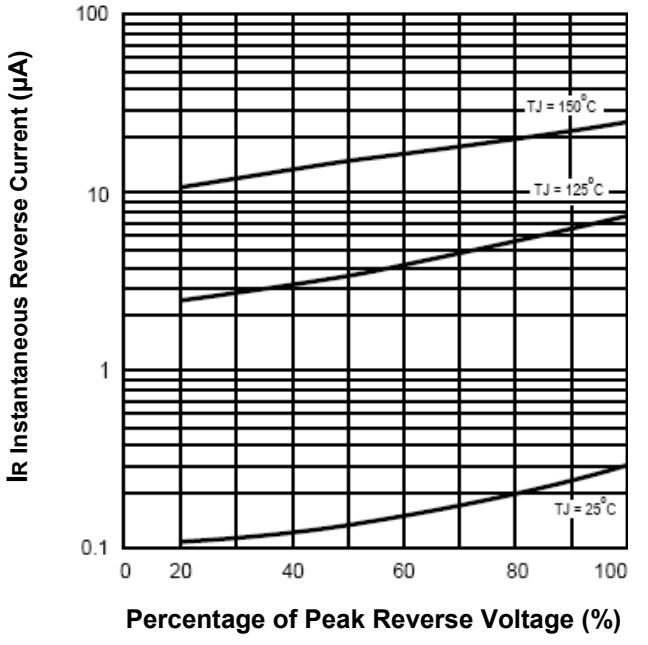

**Fig.5- Junction Capacitance**

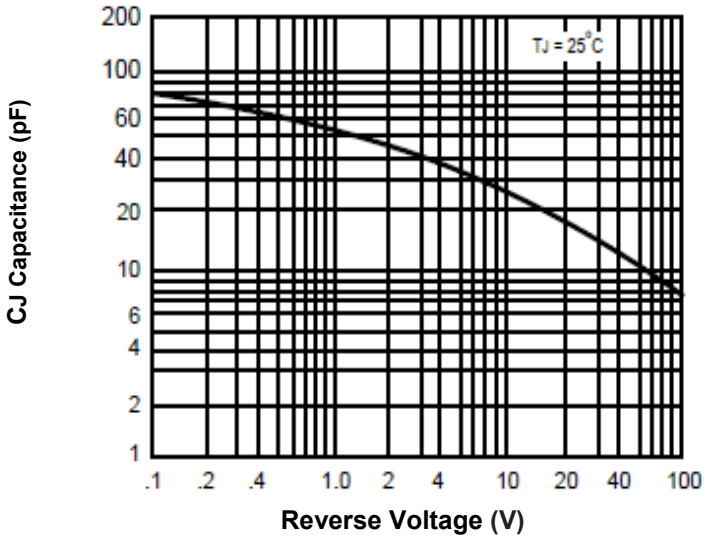


## Marking Information:

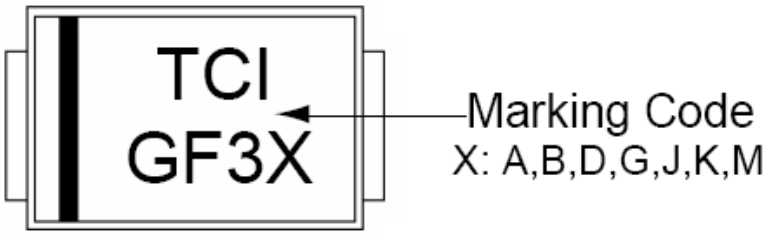

## Dimensions in inch (mm)

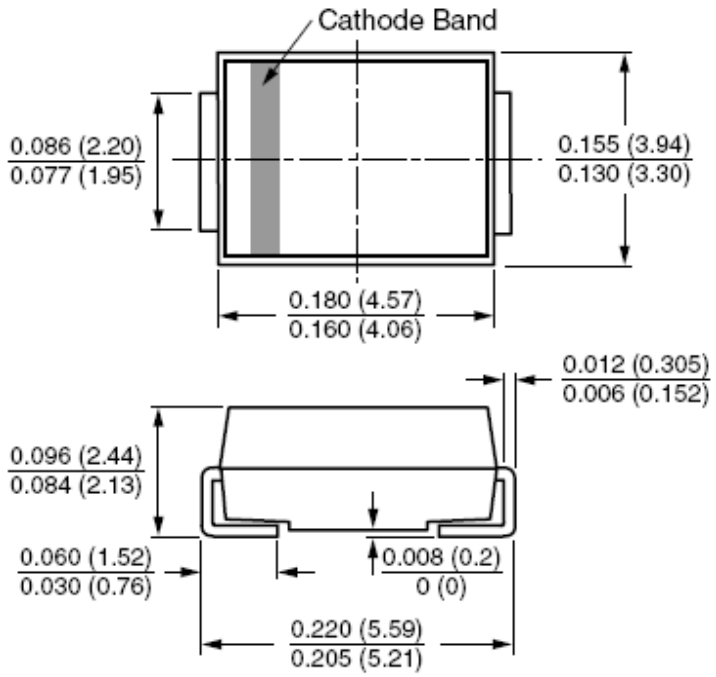


**DO-214AA**
**(SMB)**

## Mounting Pad Layout in inch (mm)

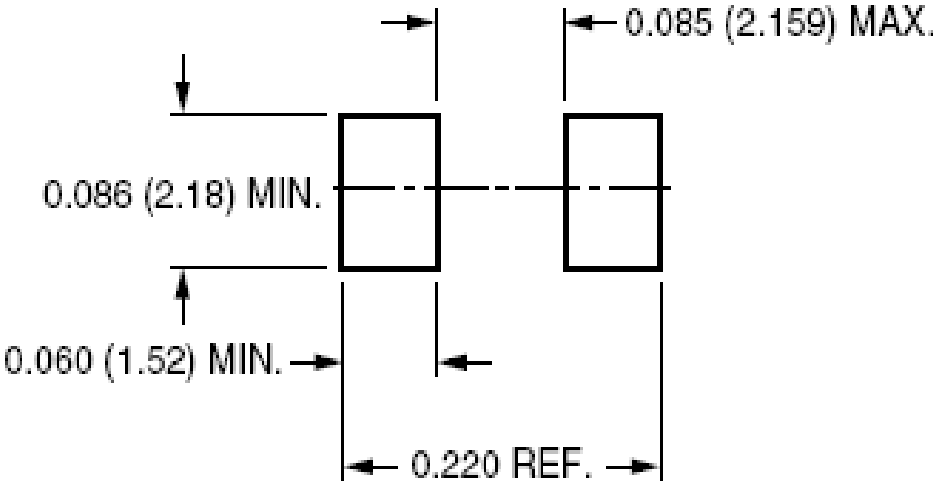

## How to contact us:

**US HEADQUARTERS**

28040 WEST HARRISON PARKWAY, VALENCIA, CA 91355-4162
Tel: (800) TAITRON (800) 824-8766 (661) 257-6060
Fax: (800) TAITFAX (800) 824-8329 (661) 257-6415
Email: taitron@taitroncomponents.com
Http://www.taitroncomponents.com

**TAITRON COMPONENTS MEXICO, S.A .DE C.V.**

BOULEVARD CENTRAL 5000 INTERIOR 5 PARQUE INDUSTRIAL ATITALAQUIA, HIDALGO C.P. 42970 MEXICO
Tel: +52-55-5560-1519
Fax: +52-55-5560-2190

**TAITRON COMPONENTS INCORPORATED REPRESENTAÇÕES DO BRASIL LTDA**

RUA DOMINGOS DE MORAIS, 2777, 2.ANDAR, SALA 24 SAÚDE - SÃO PAULO-SP 04035-001 BRAZIL
Tel: +55-11-5574-7949
Fax: +55-11-5572-0052

**TAITRON COMPONENTS INCORPORATED, SHANGHAI REPRESENTATIVE OFFICE**

METROBANK PLAZA, 1160 WEST YAN' AN ROAD, SUITE 1503, SHANGHAI, 200052, CHINA
Tel: +86-21-5424-9942
Fax: +86-21-5424-9931