Gunter Semiconductor GmbH	GFC310

N Channel Power MOSFET

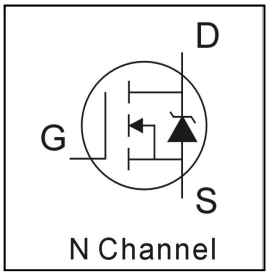

Chip Specification

General Description:

* Advanced Process Technology
* Dynamic dV/dt Rating
* **150℃ Operating Temperature**
* **Fast Switching**
* **Fully Avalanche Rated**

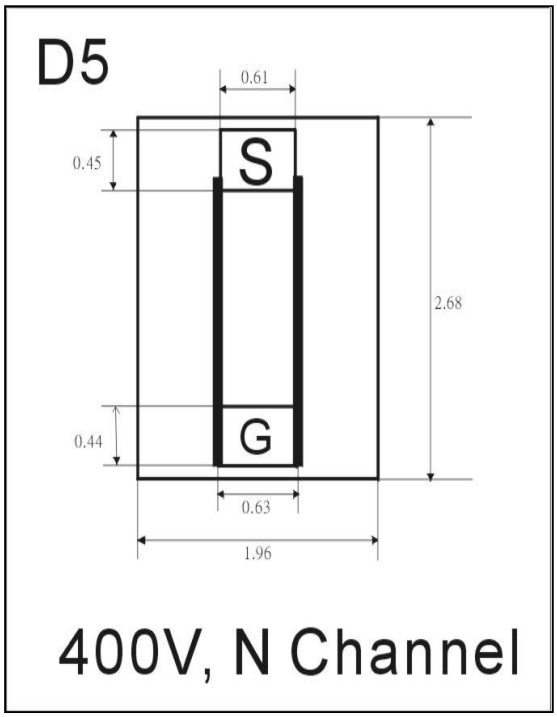

Mechanical Data:

D5	
Dimension	**1.96mm x 2.68mm**
Thickness:	**400 μm**
Metallization**:**	
Top : :	**Al**
Backside :	**CrNiAg / Au**
Suggested Bonding Conditions:	
Die Mounting:	**Solder Perform**
95/5 PbSn or 92.5./2.5/5 PbAgIn	
Source Bonding Wir	**5 mil Al**

Absolute Maximum Rating @Ta=25℃

Characteristics	Symbol	Limit	Unit	Test Conditions
Drain-to-Source Breakdown Voltage	V(BR)DSS	400	V	VGS=0V, ID=250μA
Static Drain-to - Source On-resistance	RDS(ON)	3.6	Ω	VGS=10V, ID=1A
Continuous Drain current (in target package)	ID@25℃	2	A	VGS=10V
Continuous Drain current (in target package)	ID@100℃	1.3	A	VGS=10V
Operation Junction	Tj	-55~150	℃	
Storage Temperature	TSTR	-55~150	℃	

Target Device: IRF710

TO-220AB	PD	36	W	@Tc=25℃