Honeywell

TruStability™ Silicon Pressure Sensors: HSC Series – High Accuracy

±1 % Total Error Band, Analog Output, SIP, 1 psi to 150 psi

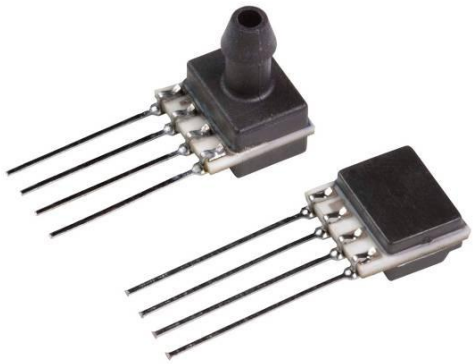

DESCRIPTION

The TruStability™ High Accuracy Silicon Ceramic (HSC) Series is a piezoresistive silicon pressure sensor offering a ratiometric analog output for reading pressure over the specified full scale pressure span and temperature range.

The HSC Series is fully calibrated and temperature compensated for sensor offset, sensitivity, temperature effects, and non-linearity using an on-board Application Specific Integrated Circuit (ASIC). Calibrated output values for pressure are updated at approximately 1 kHz.

The HSC Series is calibrated over the temperature range of 0 °C to 50 °C [32 °F to 122 °F]. The sensor is characterized for operation from a single power supply of either 3.3 Vdc or 5.0 Vdc.

These sensors measure absolute, differential, and gage pressures. The absolute versions have an internal vacuum reference and an output value proportional to absolute pressure. Differential versions allow application of pressure to either side of the sensing diaphragm. Gage and compound versions are referenced to atmospheric pressure and provide an output proportional to pressure variations from atmosphere.

The HSC Series sensors are intended for use with non-corrosive, non-ionic working fluids such as air and dry gases. They are designed and manufactured according to standards in ISO 9001.

FEATURES

- Industry-leading long-term stability
- Extremely tight accuracy of ±0.25 % FSS BFSL*
- Total error band of ±1 % full scale span maximum
- Modular and flexible design offer customers a variety of package styles and options, all with the same industry-leading performance specifications
- Miniature 10 mm x 10 mm (0.39 in x 0.39 in) package
- Low operating voltage
- Extremely low power consumption
- Ratiometric 12-bit analog output
- Precision ASIC conditioning and temperature compensated over 0 °C to 50 °C (32 °F to 122 °F) temperature range
- RoHS compliant
- Virtually insensitive to mounting orientation
- Internal diagnostic functions increase system reliability
- Also available with I^2C and SPI digital output, and in SMT and DIP packages
- Absolute, differential, gage and compound types
- Pressure ranges from 1 psi to 150 psi (60 mbar to 10 bar)
- Custom calibration available
- Various pressure port options

* Full Scale Span Best Fit Straight Line

POTENTIAL APPLICATIONS

- **Medical:**
  - Airflow monitors
  - Anesthesia machines
  - Blood analysis machines
  - Gas chromatography
  - Gas flow instrumentation
  - Kidney dialysis machines
  - Oxygen concentrators
  - Pneumatic controls
  - Respiratory machines
  - Sleep apnea equipment
  - Ventilators
- **Industrial:**
  - Barometry
  - Flow calibrators
  - Gas chromatography
  - Gas flow instrumentation
  - HVAC
  - Life sciences
  - Pneumatic controls

Table 1. Absolute Maximum Ratings[1]

Parameter	Min.	Max.	Unit
Supply voltage (V_{supply})	-0.3	6.0	V
Voltage on any pin	-0.3	V_{supply} + 0.3	V
ESD susceptibility (human body model)	3	-	kV
Storage temperature	-40 [-40]	85 [185]	° C [° F]
Lead temperature (2 s to 4 s)	-	250 [482]	° C [° F]

Table 2. Operating Specifications

Parameter	Min.	Typ.	Max.	Unit
Supply voltage (V_{supply})[2] 3.3 V 5.0 V *Sensors are either 3.3 or 5.0 V based on model selected*	 3.0 4.75	 3.3[3] 5.0[3]	 3.3 5.25	Vdc
Supply current 3.3 V supply 5.0 V supply	 - -	 1.6 2	 2.1 3	mA
Compensated temperature range[4]	0 [32]	-	50 [122]	° C [° F]
Operating temperature range[5]	-20 [-4]	-	85 [185]	° C [° F]
Startup time (power up to data ready)	-	-	5	ms
Response time	-	1	-	ms
Upper output clipping limit	-	-	97.5	% V_{supply}
Lower output clipping limit	2.5	-	-	% V_{supply}
Accuracy[6]	-	-	±0.25	%FSS BFSL
Total error band[7]	-	-	±1	%FSS[8]
Output resolution	12	-	-	bits

Table 3. Environmental Specifications

Parameter	Characteristic
Humidity	0 % to 95 % RH, non-condensing
Vibration	MIL-STD-202F, Curve AK (20.7 g random)
Shock	MIL-STD-202F, Method 213B, Condition F
Life[9]	1 million cycles minimum

Table 4. Wetted Materials[10]

Parameter	Port 1 (Pressure Port)	Port 2 (Reference Port)
Covers	high temperature polyamide	high temperature polyamide
Substrate	alumina ceramic	alumina ceramic
Adhesives	epoxy, RTV	epoxy, RTV
Electronic components	ceramic, glass, solder, silicon	silicon, glass, gold, solder

Notes:

1. Absolute maximum ratings are the extreme limits the device will withstand without damage.
2. Ratiometricity of the sensor (the ability of the device to scale to the supply voltage) is achieved within the specified operating voltage for each option. Other custom supply voltages are available, please contact Honeywell Customer Service.
3. The sensor is not reverse polarity protected. Incorrect application of supply voltage or ground to the wrong pin may cause electrical failure.
4. The compensated temperature range is the temperature range over which the sensor will produce an output proportional to pressure within the specified performance limits.
5. The operating temperature range is the temperature range over which the sensor will produce an output proportional to pressure but may not remain within the specified performance limits.
6. Accuracy: The maximum deviation in output from a Best Fit Straight Line (BFSL) fitted to the output measured over the pressure range at 25 °C [77 °F]. Includes all errors due to pressure non-linearity, pressure hysteresis, and non-repeatability.
7. Total Error Band: The maximum deviation from the ideal transfer function over the entire compensated temperature and pressure range. Includes all errors due to offset, full scale span, pressure non-linearity, pressure hysteresis, repeatability, thermal effect on offset, thermal effect on span, and thermal hysteresis.
8. Full Scale Span (FSS) is the algebraic difference between the output signal measured at the maximum (P_{max}) and minimum (P_{min}) limits of the pressure range. (See Figure 1 for ranges).
9. Life may vary depending on specific application in which sensor is utilized.
10. Contact Honeywell Customer Service for detailed material information.

Figure 1. Nomenclature and Order Guide

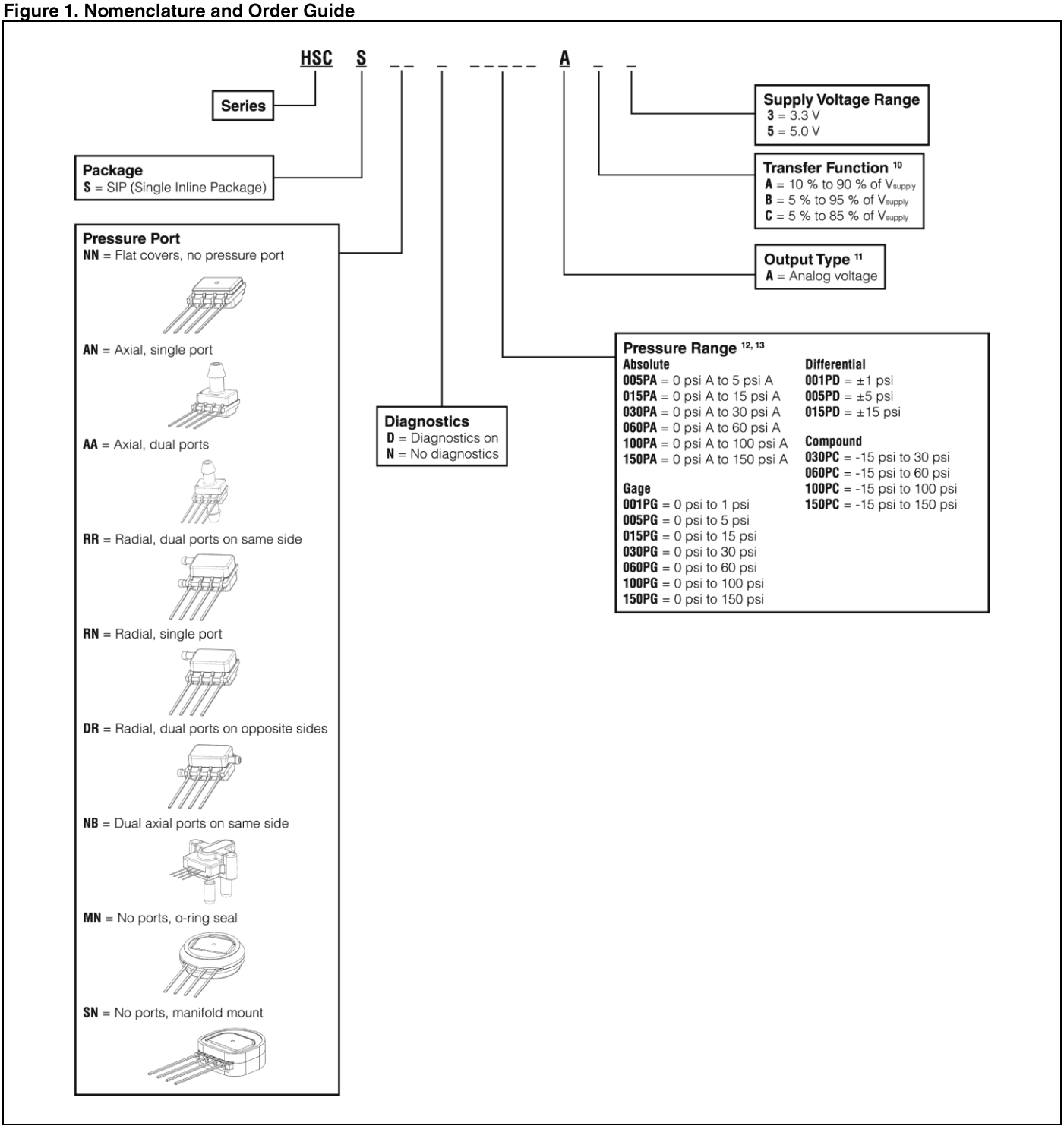

Notes:

11. The transfer function limits define the output of the sensor at a given pressure input. By specifying P_{min} and P_{max}, the output at P_{min} and P_{max} the complete transfer function of the sensor is defined. See Figure 2 for a graphical representation of the transfer function. Other transfer functions are available. Contact Honeywell Customer Service for more information.
12. Digital outputs (SPI and I^2C) are also available. Contact Honeywell Customer Service for more information.
13. Custom pressure ranges are available. Contact Honeywell Customer Service for more information.
14. See Table 5 for an explanation of sensor types.

±1 % Total Error Band, SIP, Analog Output, 1 psi to 150 psi

Figure 2. Transfer Functions and Limits

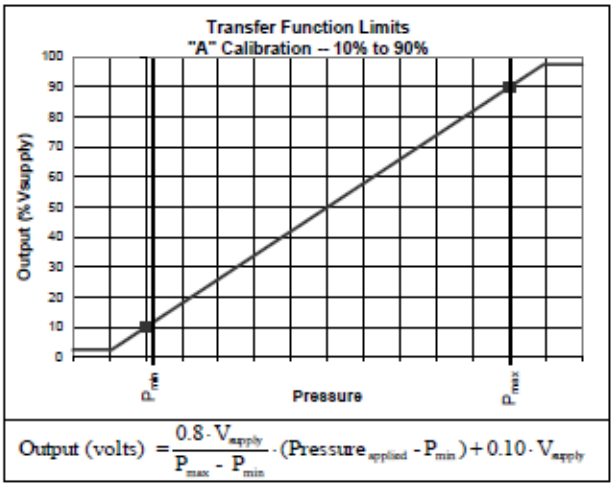

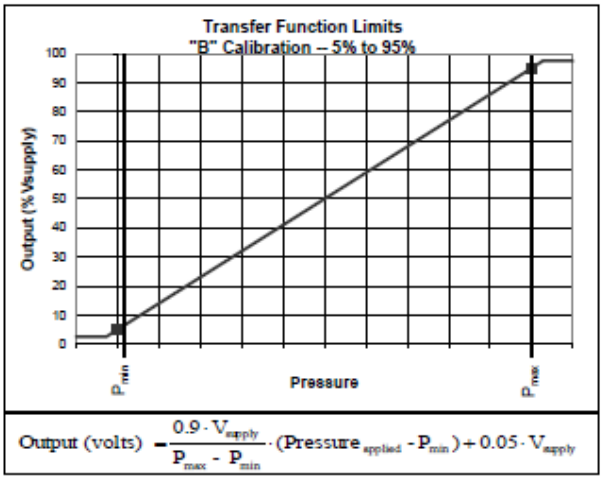

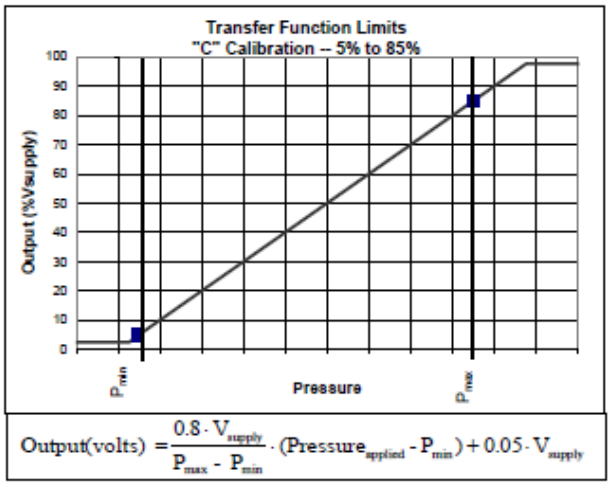

Figure 3. Completed Catalog Listing Example

HSCSANN100PGAA3: SIP, AN ports, no diagnostics, 100 psi gage sensor, 10 % to 90 % calibration at 3.3 V.

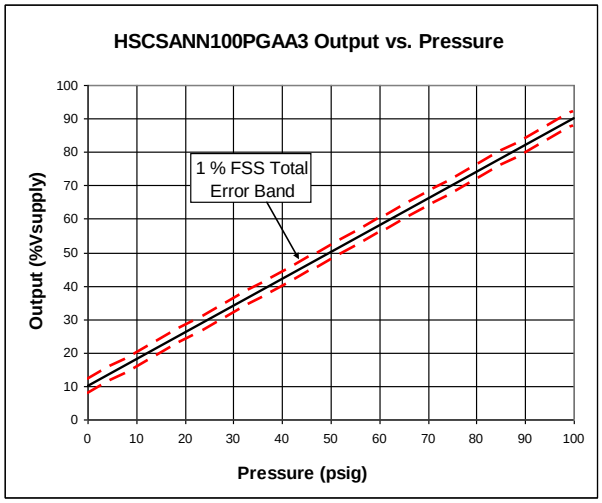

Table 5. Sensor Types

Pressure Type	Description
Absolute	Output is proportional to the difference between applied pressure and a built-in reference to vacuum. P_{min} is set at absolute zero pressure (full vacuum).
Compound	Output is proportional to the difference between applied pressure and atmospheric (ambient) pressure. P_{min} is set at -15 PSI G, referenced to atmospheric pressure.
Differential	Output is proportional to the difference between the pressures applied to each port. (Port1 – Port2) 50% point of transfer function set at Port1 = Port2.
Gage	Output is proportional to the difference between applied pressure and atmospheric (ambient) pressure. P_{min} is set at atmospheric pressure.

Table 6. Pressure Range Specifications

Pressure Range Order Code	Pressure Range		Over-pressure[14]	Burst Pressure[15]	Common Mode Pressure[16]	Long-term Stability (1000 hr, 25 °C [77 °F])
	P_{min}	P_{max}				
Absolute						
005AP	0 psi A	5 psi A	30 psi A	40 psi A	NA	±0.35 %
015AP	0 psi A	15 psi A	30 psi A	60 psi A	NA	±0.25 %
030AP	0 psi A	30 psi A	60 psi A	120 psi A	NA	±0.25 %
060AP	0 psi A	60 psi A	120 psi A	240 psi A	NA	±0.25 %
100AP	0 psi A	100 psi A	250 psi A	250 psi A	NA	±0.25 %
150AP	0 psi A	150 psi A	250 psi A	250 psi A	NA	±0.25 %
Differential						
001PD	-1 psi	1 psi	10 psi	10 psi	150 psi	±0.35 %
005PD	-5 psi	5 psi	30 psi	40 psi	150 psi	±0.35 %
015PD	-15 psi	15 psi	30 psi	60 psi	150 psi	±0.35 %
Gage						
001PG	0 psi	1 psi	10 psi	10 psi	150 psi	±0.35 %
005PG	0 psi	5 psi	30 psi	40 psi	150 psi	±0.35 %
015PG	0 psi	15 psi	30 psi	60 psi	150 psi	±0.35 %
030PG	0 psi	30 psi	60 psi	120 psi	150 psi	±0.35 %
060PG	0 psi	60 psi	120 psi	240 psi	150 psi	±0.35 %
100PG	0 psi	100 psi	250 psi	250 psi	250 psi	±0.35 %
150PG	0 psi	150 psi	250 psi	250 psi	250 psi	±0.25 %
Compound						
030PC	-15 psi	30 psi	60 psi	120 psi	150 psi	±0.25 %
060PC	-15 psi	60 psi	120 psi	240 psi	150 psi	±0.25 %
100PC	-15 psi	100 psi	250 psi	250 psi	250 psi	±0.25 %
150PC	-15 psi	150 psi	250 psi	250 psi	250 psi	±0.25 %

Notes:

15. Overpressure: The maximum pressure which may safely be applied to the product for it to remain in specification once pressure is returned to the operating pressure range. Exposure to higher pressures may cause permanent damage to the product. Unless otherwise specified this applies to all available pressure ports at any temperature with the operating temperature range.
16. Burst pressure: The maximum pressure that may be applied to any port of the product without causing escape of pressure media. Product should not be expected to function after exposure to any pressure beyond the burst pressure.
17. Common mode pressure: The maximum pressure that can be applied simultaneously to both ports of a differential pressure sensor without causing changes in specified performance.

Table 7. Pinout for All Port Styles

Output Type	Pin 1	Pin 2	Pin 3	Pin 4
Analog	NC	V_{supply}	Output	ground

Figure 4. Package Dimensional Drawings
(For reference only: mm [in])
(Other package combinations are possible, please contact Honeywell Customer Service.)

NN Pressure Port: Flat Covers, No Pressure Port

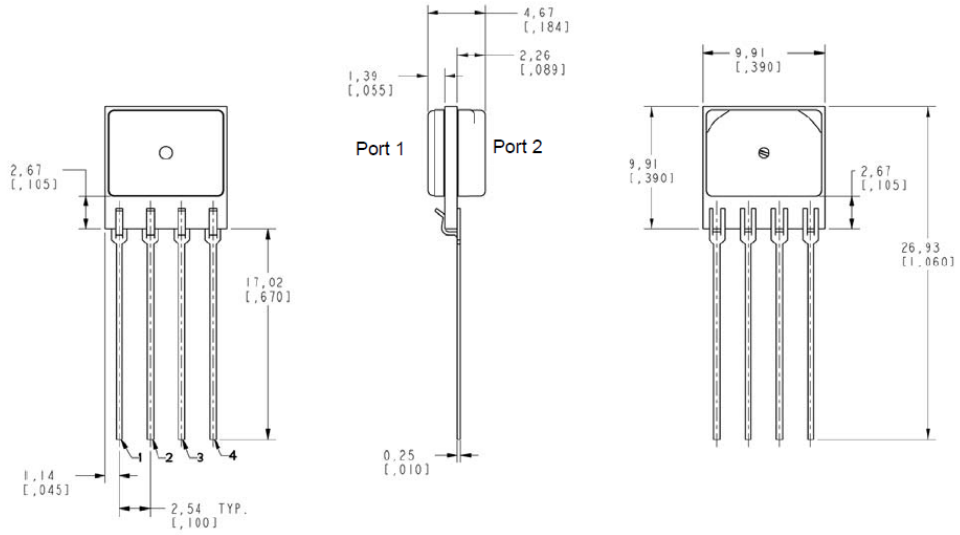

AN Pressure Port: Axial, Single Port

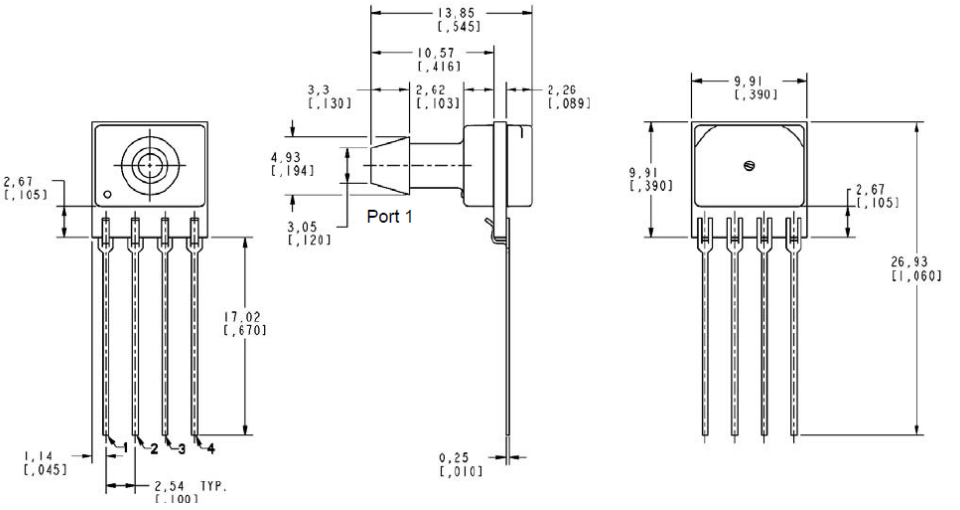

Figure 4. Package Dimensional Drawings (continued)

AA Pressure Port: Axial, Dual Ports

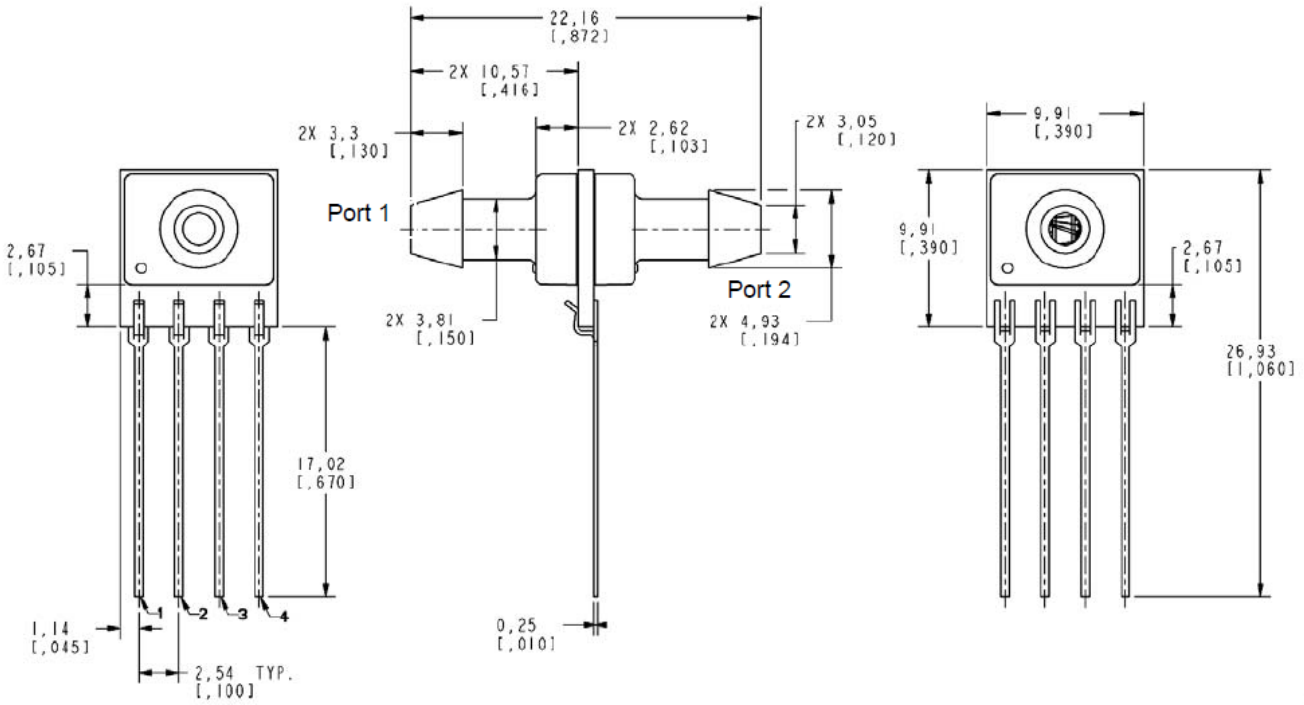

RN Pressure Port: Radial, Single Port

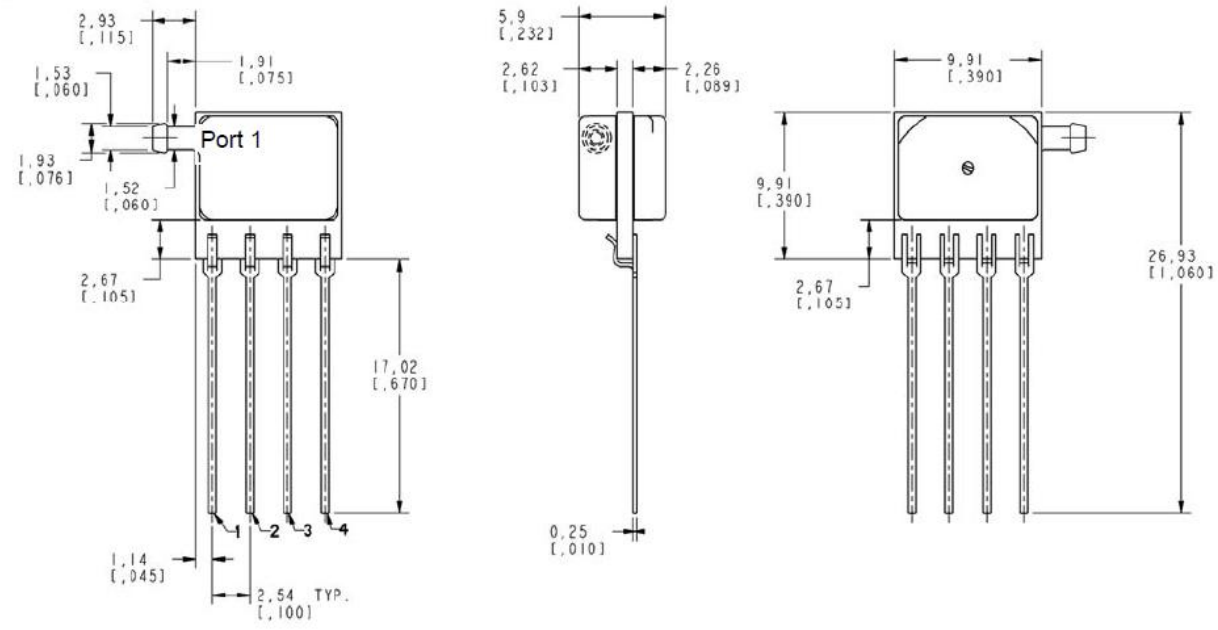

Figure 4. Package Dimensional Drawings (continued)

RR Pressure Port: Radial, Dual Ports on Same Side

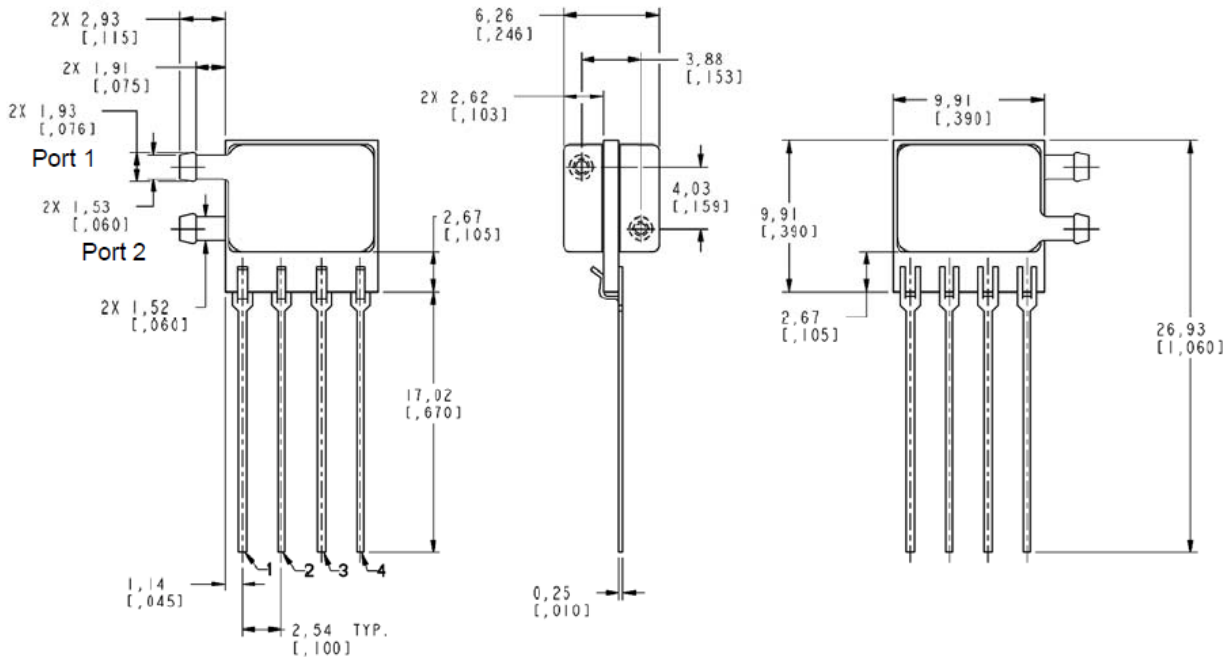

DR Pressure Port: Radial, Dual Ports on Opposite Sides

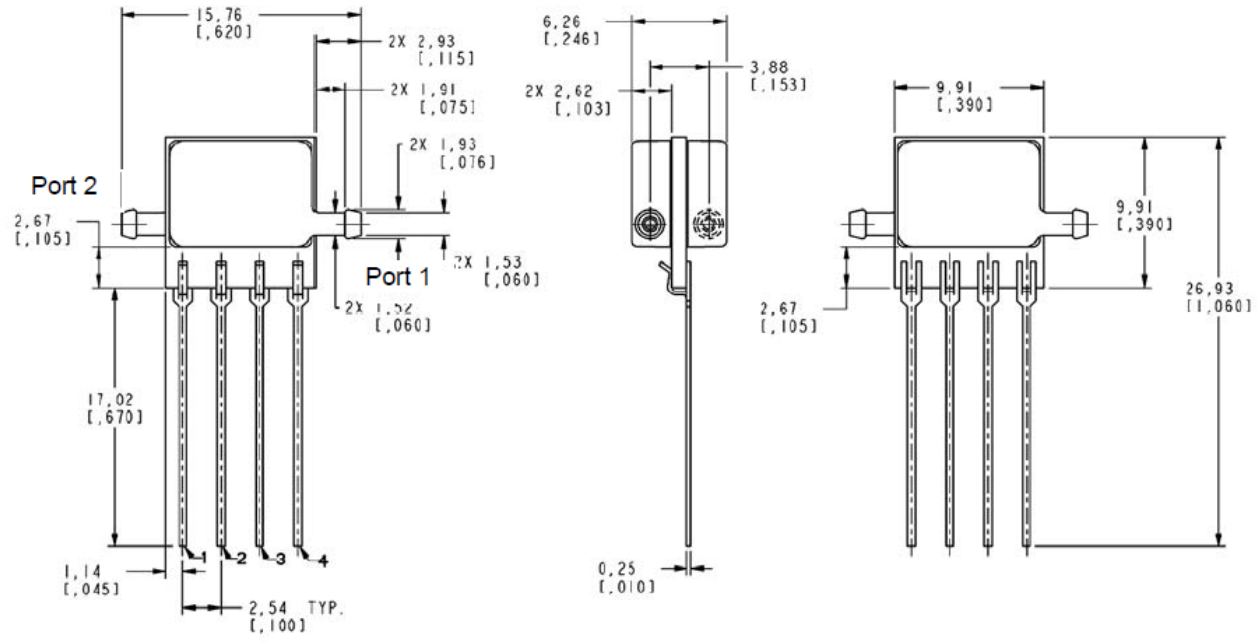

Figure 4. Package Dimensional Drawings (continued)

NB Pressure Port: Axial Ports on Same Side

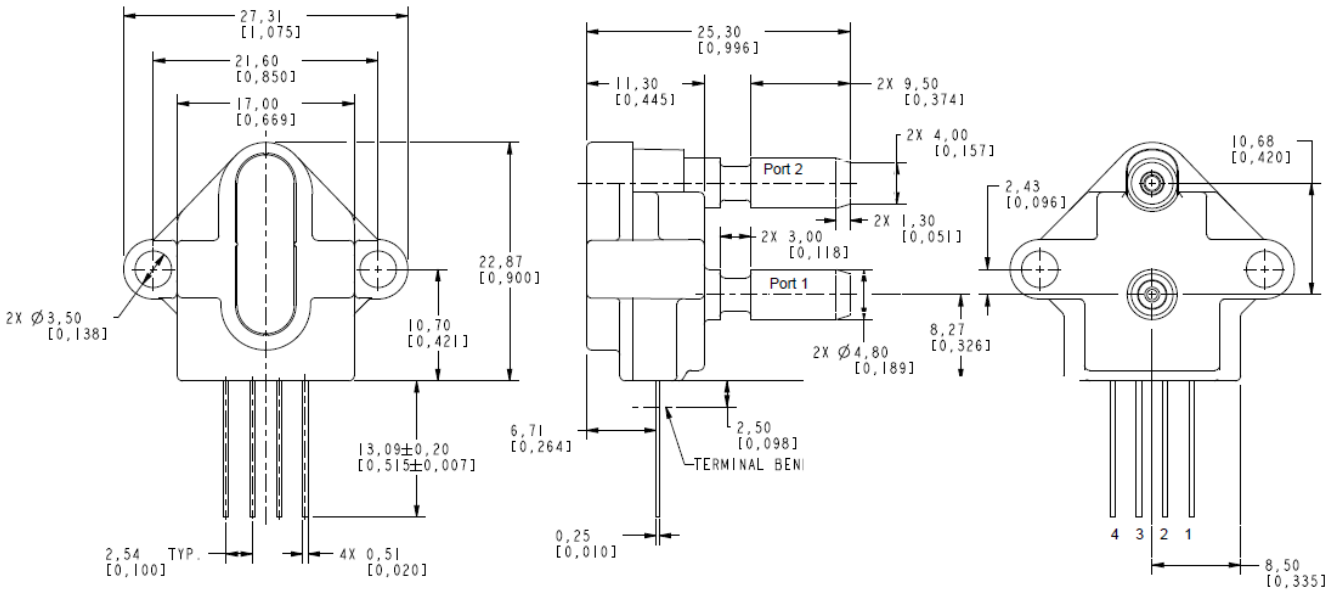

MN Pressure Port: No Ports, O-Ring Mount

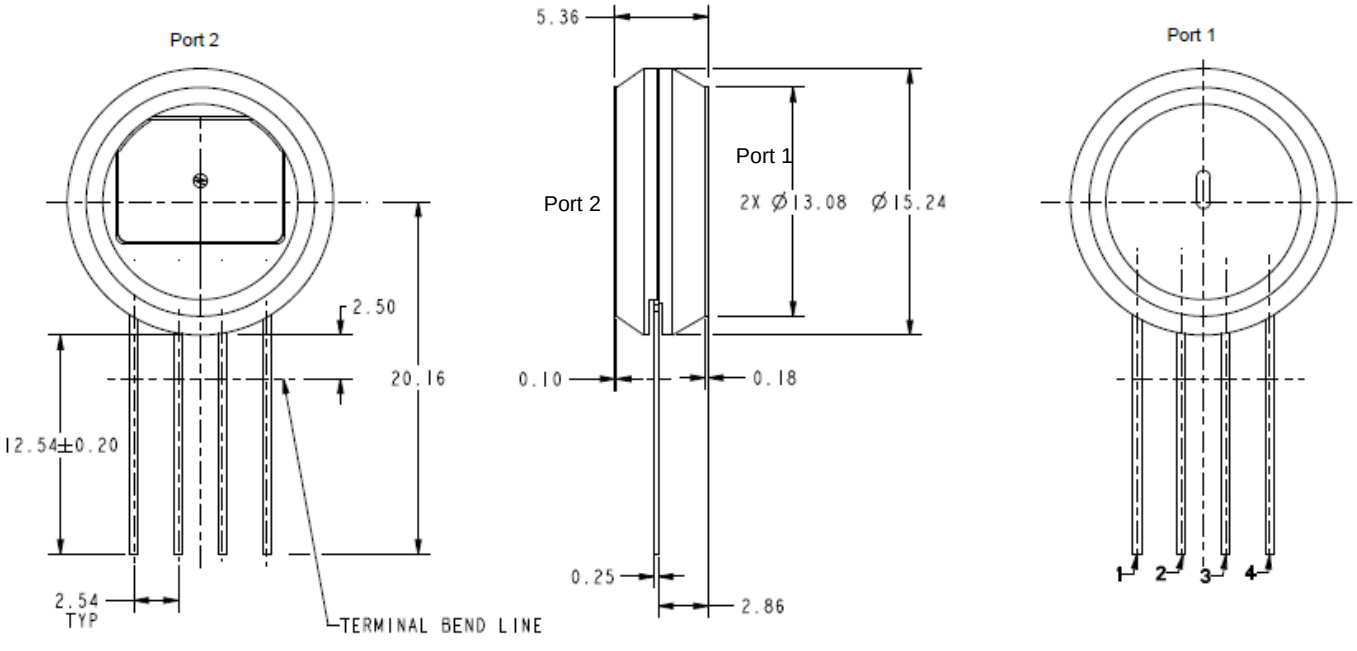

Figure 4. Package Dimensional Drawings (continued)

SN Pressure Port: No Ports, Manifold Mount

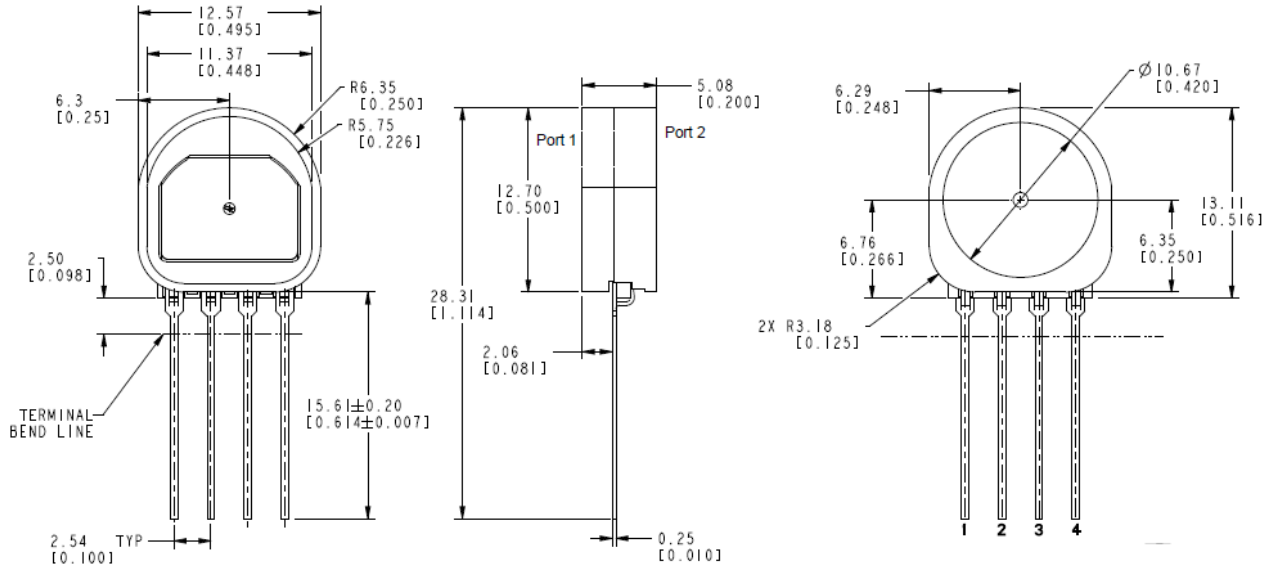

⚠ WARNING

PERSONAL INJURY

DO NOT USE these products as safety or emergency stop devices or in any other application where failure of the product could result in personal injury.

Failure to comply with these instructions could result in death or serious injury.

WARRANTY/REMEDY

Honeywell warrants goods of its manufacture as being free of defective materials and faulty workmanship. Honeywell's standard product warranty applies unless agreed to otherwise by Honeywell in writing; please refer to your order acknowledgement or consult your local sales office for specific warranty details. If warranted goods are returned to Honeywell during the period of coverage, Honeywell will repair or replace, at its option, without charge those items it finds defective. **The foregoing is buyer's sole remedy and is in lieu of all other warranties, expressed or implied, including those of merchantability and fitness for a particular purpose. In no event shall Honeywell be liable for consequential, special, or indirect damages.**

While we provide application assistance personally, through our literature and the Honeywell web site, it is up to the customer to determine the suitability of the product in the application.

Specifications may change without notice. The information we supply is believed to be accurate and reliable as of this printing. However, we assume no responsibility for its use.

⚠ WARNING

MISUSE OF DOCUMENTATION

- The information presented in this product sheet is for reference only. Do not use this document as a product installation guide.
- Complete installation, operation, and maintenance information is provided in the instructions supplied with each product.

Failure to comply with these instructions could result in death or serious injury.

SALES AND SERVICE

Honeywell serves its customers through a worldwide network of sales offices, representatives and distributors. For application assistance, current specifications, pricing or name of the nearest Authorized Distributor, contact your local sales office or:

E-mail: info.sc@honeywell.com

Internet: www.honeywell.com/sensing

Phone and Fax:

Asia Pacific	+65 6355-2828; +65 6445-3033 Fax
Europe	+44 (0) 1698 481481; +44 (0) 1698 481676 Fax
Latin America	+1-305-805-8188; +1-305-883-8257 Fax
USA/Canada	+1-800-537-6945; +1-815-235-6847 +1-815-235-6545 Fax

Sensing and Control
Honeywell
1985 Douglas Drive North
Golden Valley, MN 55422
www.honeywell.com

008159-2-EN IL50 GLO Printed in USA
July 2009
© 2009 Honeywell International Inc.