MI COMPAC Series

50-300 WATTS MILITARY READY TO USE COMPONENT

Features

- **Inputs 28Vdc and 270Vdc**
- **Outputs 1 to 3, 1 to 95Vdc**
- **EMI Compliance: MIL-STD-461C&D/E**
- **Transients & Spikes: MIL-STD-704A, 1275A/B**
- **Quality System MIL-1-45208**
- **Reverse polarity protected**
- **Low noise FM control**

Specifications

INPUT

Nominal input	28Vdc	270Vdc
Input range	18 – 50Vdc	125V – 400Vdc
Input spike limit MIL-STD-704A MIL-STD-1275A/B	 -600V to +600Vdc -250V to +250Vdc	 800Vdc max -600V to +600Vdc
Input surge limit	100Vdc	500Vdc
Overvoltage shutdown	50Vdc	400Vdc
Inrush current	110%	110% of input typical
Reverse polarity protection Recommended Fuse	10A	2A FO3A type

OUTPUT

	28Vdc	270Vdc
Output power	250W	250W
Clamp voltage	60Vdc	420Vdc
Overload protection	20A	4A
Set point accuracy	0.5% V nom typical	
Load/Line regulation	0.2-0.5% V nom typical	
Output temperature drift	0.01%/°C	
Output noise	1%pp V nom	
Output voltage trimming	50%-110%	
Remote sense compensation	0.5V	
Current Limit	105% – 125%	

MECHANICAL

Dimensions	MI-LC MI-MC, MI-PC MI-NC, MI-QC, MIRC	219x64x25mm 219x125x25mm 219x186x25mm

OPERATING

Isolation characteristics	
Input – output	4,242Vrms
Input to case	28Vdc input: 2,121Vrms 270Vdc input: 2,500Vrms
Output to case	500Vrms

ENVIRONMENTAL

Storage temperature	+100°C
Operating temperature case	+85°C
Shutdown temperature	+95°C typical

STANDARDS AND APPROVALS

EMI/RFI characteristics (MIL-STD-461C, D &E)

INPUT POWER LEADS

Conduct emissions	CE01, CE03, CE07, CE101, CE102 MIL-STD-461C & D (1 Up) CE101 MIL-STD-461E (2 Up & 3Up)
Conducted susceptibility	CS01, CS02, CS06, CS101, CS114, CS116 MIL-STD-461C & D (1 Up) CS101, CS114, CS116 MIL-STD-461E (2 Up & 3Up)

Selection Table

Single output	MI-LC [a] [b] – [c] [d] MI-MC [a] [b] – [c] [e] MI-NC [a] [b] – [c] [f]	50–100W 200W 300W
Dual output	MI-PC [a] [b] [b] – [c] [d] [d] MI-QC [a] [b] [b] – [c] [e] [d]	100–200W 250–300W
Triple output	MI-RC [a] [b] [b] [b] – [c] [d] [d] [d]	150–300W

For conduction cooled models add – cc at end of model number

Please substitute selection character (e.g. [a]) with value designator in the appropriate table below.

A=INPUT VOLTAGE		B=OUTPUT VOLTAGE		C=PRODUCT GRADE
NOMINAL	RANGE			
2=28Vdc	18-50V	Z = 2Vdc	2 = 15Vdc	I = -40°C to +85°C
6=270Vdc	125-475V(1)	Y = 3.3Vdc	3 = 24Vdc	
		O = 5Vdc	L = 28Vdc	M = -55°C to +85°C
		M = 10Vdc	4 = 48Vdc	
		1 = 12Vdc		

D=OUTPUT POWER/CURRENT		E=OUTPUT POW./CUR.		F=OUTPUT POW./CUR.	
5V	<5V	⩾5V	<5V	⩾5V	<5V
Y = 50W	10A	U = 200W	–	S = 300W	–
X = 75W	15A	S = –	60A	P = –	90A
W= 100W	20A				
V = –	30A				

(1) These units rated at 75% load from 125-150Vin: 5Vout @ 100W; 2Vout and 3.3Vout @ 30A.

MI COMPAC Series

50-300 WATTS MILITARY READY TO USE COMPONENT

Technical Illustrations

Inputs **Outputs**

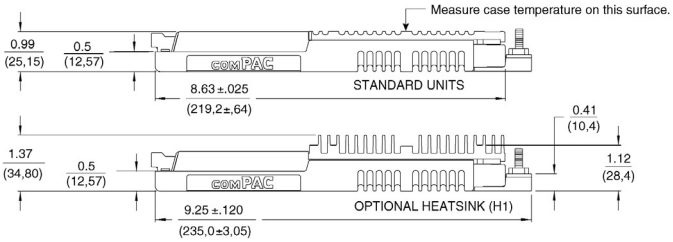

1-Up

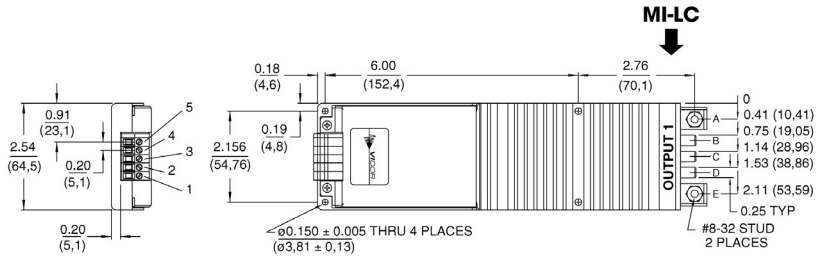

2-Up

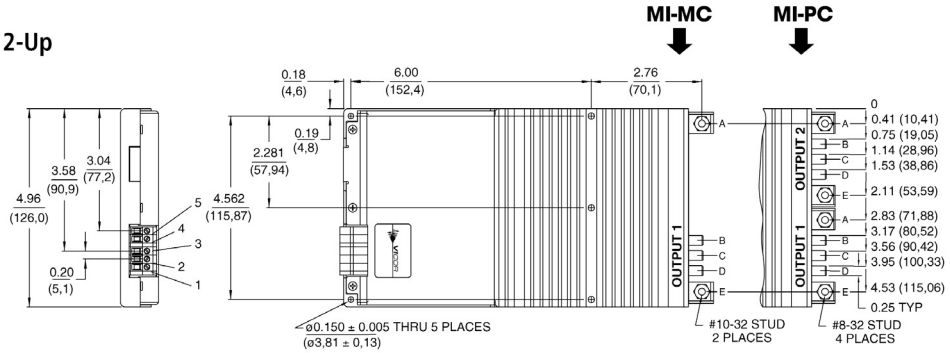

3-Up

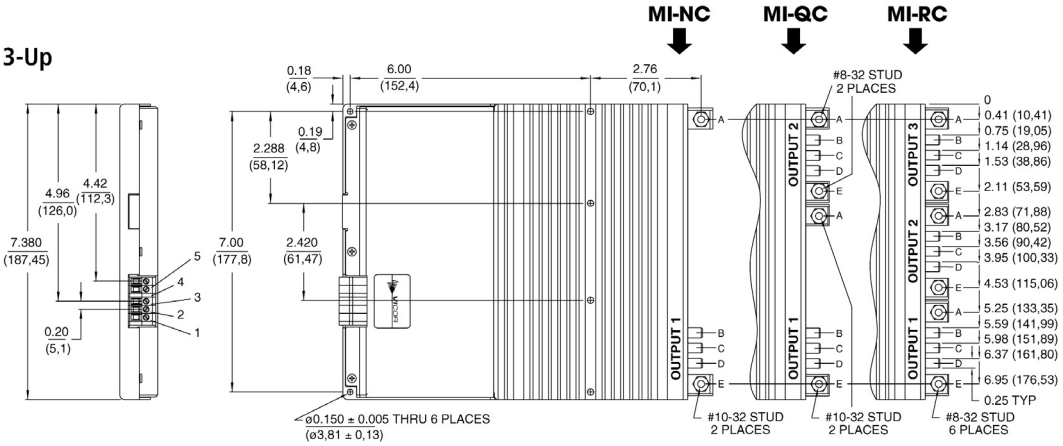

Inputs

1. Ground
2. -Input
3. +Input
4. Disable-
5. Disable+

Outputs

Output #1	Output #2	Output #3
A +Output	A +Output	A +Output
B +Sense	B +Sense	B +Sense
C Trim	C Trim	C Trim
D -Sense	D -Sense	D -Sense
E -Output	E -Output	E -Output