YAMAICHI ELECTRONICS

Industrial Connection System

Y-ON® RJ45 SERIES

Y-ON® USB SERIES

Y-ON® IEEE SERIES

Y-ON® PROFI-NET SERIES

WWW.YAMAICHI.EU

2011

Table of Contents

Y-ConRJ45 system overview ..... inside cover

IP67/68/69K protected components for Y-Con RJ45
- Cover, metal housing and transport cap 2
- Cover EMI version, metal housing and transport cap 3
- Full metal cover and transport cap 4
- Full metal cover EMI version and transport cap 5
- Mounting flange, transport cap and punch 6
- Full metal mounting flange, transport cap and punch 7

Industrial RJ45 plugs
- RJ45 cable plug, standard strain relief and transport cap 8

IP20 protected components for Y-Con RJ45
- Locking system (180°) with holding frames 9
- Metal cover EMI version and transport cap 10
- Locking system (90°) with locking slider 11

RJ45 cable assemblies ..... 12 - 13

Industrial RJ45 jacks ..... 14 - 22

Assembly tools 23

Industrial cables ..... 24 - 25

Field kits for Y-Con RJ45 ..... 26 - 27

Industrial peripherals
- Outlet 28
- Terminal 28
- Coupler 29
- Ethernet switch 29

Y-Con with M8 / M12 cable assemblies ..... 30 - 31

Y-ConProfiNet 32

Y-ConUSB
- Memory stick 33
- Mounting flange and adapter 34
- PCB mounted jacks, coupler jacks 35
- Cable assemblies ..... 36 -37

Y-ConIEEE
- Cable assemblies 38
- Mounting flange, adapter and PCB mounted jack 39

Product tests 40

Part number details ..... back pages

Y-ConUSB system overview ..... back cover

The technical data and specifications of the products shown in this catalogue are for reference only, and apply to products available at the time of catalogue printing in Nov 2010. Product modification often involves changes to technical data and size, and it is therefore recommended that the buyer request the latest technical specifications and terms of delivery before placing a purchasing contract.

Part Number (Details)

Y-ConCover - 10 - * - *

- Series
- Design Number
- No Mark = Blue B = Black
- No Mark = Std. LT = Low Temp.

Part Number	Colour	Low Temperature Type
Y-ConCover-10	Blue	No
Y-ConCover-10-B	Black	No
Y-ConCover-10-LT	Blue	Yes
Y-ConCover-10-B-LT	Black	Yes

Description:

IP67/68/69K cover for self assembly with Y-Con plugs and cables, complete with latches, seals and terminator cap

IP67/68/69K-Steckergehäuse *zur Selbstmontage mit Y-Con Kabelsteckern und Kabeln, komplett mit Rasthaken, Dichtungen und Abschlusskape*

Material:

Body *Gehäuse*	PBT, UL94V-0
Seal *Dichtung*	FKM (Viton®) or HNBR
Fixing clips *Rasthaken*	Stainless steel

Specifications:

Operating Temp.: *Betriebstemp.*	Std.	- 20°C ~ +120°C
	LT	- 40°C ~ +120°C

Outline Dimensions

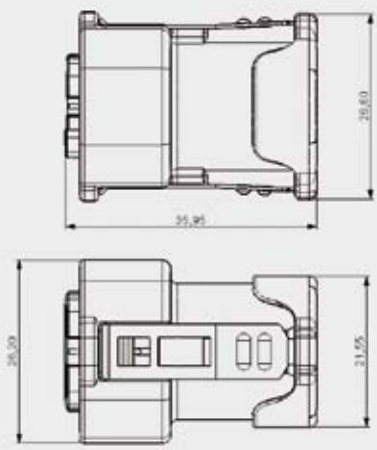

Accessories — Part No.: Y-ConCover-30

Description:

Metal cover for retro-fitting to Y-ConCover-10-* offering increased mechanical stability

Metallisches Schutzgehäuse zur Nachrüstung auf Y-ConCover-10-, für erhöhte mechanische Stabilität*

Material:

Body + Buttons *Gehäuse*	Die-cast zinc
Screws *Schrauben*	Stainless Steel

Specifications:

Operating Temp.: -20°C ~ +120°C
Betriebstemp.

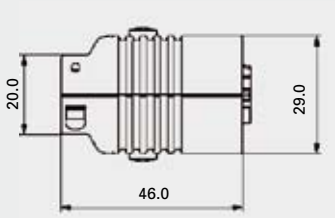

Accessories — Part No.: Y-ConAS-21

Description:

IP67 protective transport cap for Y-ConCover-10-* / Y-ConCover-40-*

IP67-Transportschutzabdeckung für Y-ConCover-10- / Y-ConCover-40-**

Material:

Body — PE (Transparent white)
Gehäuse

Specifications:

Operating Temp.: -20°C ~+80°C
Betriebstemp.

SPECIFICATIONS ARE FOR REFERENCE ONLY AND SUBJECT TO ALTERATION WITHOUT PRIOR NOTICE – DIMENSIONS IN MILLIMETER

Part Number
(Details)

Y-ConCover - 10 - * - * - E

- Series
- Design Number
- No Mark = Blue B = Black
- No Mark = Std. LT = Low Temp.
- E = EMI Version

Part Number	Colour	Low Temperature Type	EMI Spring
Y-ConCover-10-E	Blue	No	Yes
Y-ConCover-10-B-E	Black	No	Yes
Y-ConCover-10-LT-E	Blue	Yes	Yes
Y-ConCover-10-B-LT-E	Black	Yes	Yes

Description:

IP67/68/69K cover EMI version for self assembly with Y-Con plugs and cables, complete with latches, seals and terminator cap. Integrated EMI spring for improved EMI protection

IP67/68/69K-Steckergehäuse EMV *Version zur Selbstmontage mit Y-Con Kabelsteckern und Kabeln, komplett mit Rasthaken, Dichtungen und Abschlusskape. Integrierte EMV Feder für verbesserten EMV Schutz*

Material:

Body *Gehäuse*	PBT, UL94V-0
Seal *Dichtung*	FKM (Viton®) or HNBR
Fixing clips *Rasthaken*	Stainless steel
EMI Spring *EMV Feder*	Brass

Specifications:

Operating Temp.: *Betriebstemp.*	Std.	- 20°C ~ +120°C
	LT	- 40°C ~ +120°C

Outline Dimensions

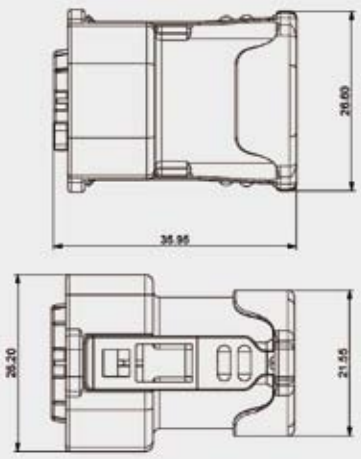

Accessories — Part No.: Y-ConCover-30

Description:

Metal cover for retro-fitting to Y-ConCover-10-* offering increased mechanical stability

Metallisches Schutzgehäuse zur Nachrüstung auf Y-ConCover-10-, für erhöhte mechanische Stabilität*

Material:

Body + Buttons *Gehäuse*	Die-cast zinc
Screws *Schrauben*	Stainless Steel

Specifications:

Operating Temp.: -20°C ~ +120°C
Betriebstemp.

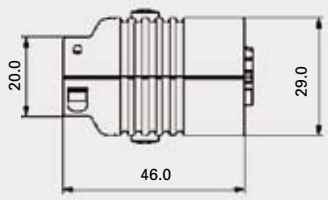

Accessories — Part No.: Y-ConAS-21

Description:

IP67 protective transport cap for Y-ConCover-10-* / Y-ConCover-40-*

IP67-Transportschutzabdeckung für Y-ConCover-10- / Y-ConCover-40-**

Material:

Body PE (Transparent white)
Gehäuse

Specifications:

Operating Temp.: -20°C ~+80°C
Betriebstemp.

TECHNISCHE ÄNDERUNGEN VORBEHALTEN – MASSE IN MILLIMETER

Part Number (Details)

Y-ConCover - 40 - **

- Series
- Design Number
- No Mark = Std. LT = Low Temp.

Part Number	Low Temperature Type
Y-ConCover-40	No
Y-ConCover-40-LT	Yes

Description:

IP67/68/69K metal cover for self-assembly with Y-Con plugs and cables, with Twist-Lock open and close mechanism, complete with latches, seals and terminator cap

IP67/68/69K-Metallgehäuse *(Twist-Lock) mit Schraubverschluss zur Selbstmontage mit Y-Con Kabelsteckern und Kabeln, komplett mit Rasthaken, Dichtungen und Abschlusskappe*

Material:

Body *Gehäuse*	Die-cast zinc
Seal *Dichtung*	FKM (Viton®) or HNBR
Fixing clips *Rasthaken*	Stainless steel

Specifications:

Operating Temp.: *Betriebstemp.*	Std.	- 20°C ~ +120°C
	LT	- 40°C ~ +120°C

Accessories

Part No.: Y-ConAS-21

Description:

IP67 protective transport cap for Y-ConCover-10-* / Y-ConCover-40-*

IP67-Transportschutzabdeckung für Y-ConCover-10- / Y-ConCover-40-**

Material:

Body *Gehäuse*	PE
Colour *Farbe*	Transparent white

Specifications:

Operating Temp.: -20°C ~+80°C
Betriebstemp.

Outline Dimensions

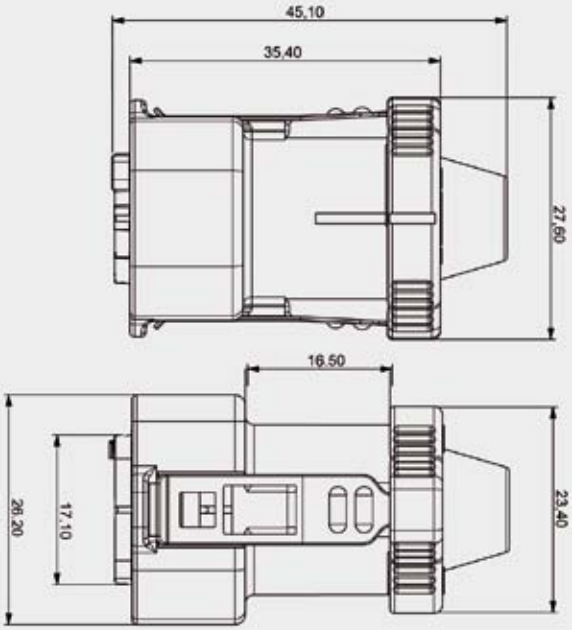

SPECIFICATIONS ARE FOR REFERENCE ONLY AND SUBJECT TO ALTERATION WITHOUT PRIOR NOTICE – DIMENSIONS IN MILLIMETER

Part Number (Details)

Y-ConCover - 40 - ** - E

- Series
- Design Number
- No Mark = Std. LT = Low Tem
- E = EMI Version

Part Number	Low Temperature Type	EMI Spring
Y-ConCover-40-E	No	Yes
Y-ConCover-40-LT-E	Yes	Yes

Description:

IP67/68/69K metal cover EMI version for self-assembly with Y-Con plugs and cables, with Twist-Lock open and close mechanism, complete with latches, seals and terminator cap. Assembled EMI spring and additional EMI washer for improved EMI protection

IP67/68/69K-Metallgehäuse EMV *(Twist-Lock) mit Schraubverschluss zur Selbstmontage mit Y-Con Kabelsteckern und Kabeln, komplett mit Rasthaken, Dichtungen und Abschlusskappe. Assemblierte EMV Feder plus zusätzliche EMV Scheibe für verbesserten EMV Schutz*

Material:

Body *Gehäuse*	Die-cast zinc
Seal *Dichtung*	FKM (Viton®) or HNBR
Fixing clips *Rasthaken*	Stainless steel
EMI Spring *EMV Feder*	Phosphor Bronze
EMI Washer *EMV Scheibe*	Phosphor Bronze

Specifications:

Operating Temp.: *Betriebstemp.*	Std. LT	- 20°C ~ +120°C - 40°C ~ +120°C

Accessories — Part No.: Y-ConAS-21

Description:

IP67 protective transport cap for Y-ConCover-10-* / Y-ConCover-40-*

IP67-Transportschutzabdeckung für Y-ConCover-10- / Y-ConCover-40-**

Material:

Body *Gehäuse*	PE
Colour *Farbe*	Transparent white

Specifications:

Operating Temp.: -20°C ~+80°C
Betriebstemp.

Outline Dimensions

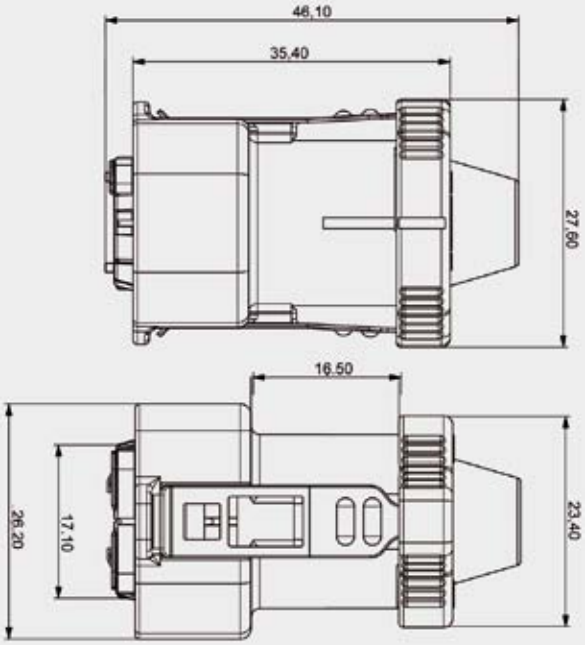

TECHNISCHE ÄNDERUNGEN VORBEHALTEN – MASSE IN MILLIMETER

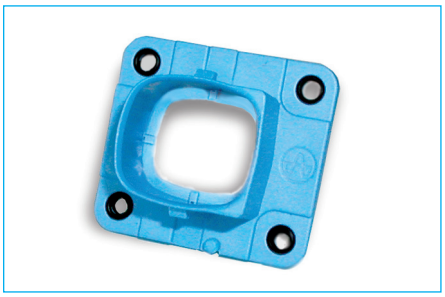

Part Number (Details)

Y-ConFlange - 10 - *

- Series
- Design Number
- No Mark = Blue B = Black

Part Number	Colour
Y-ConFlange-10	Blue
Y-ConFlange-10-B	Black

Description:

Universal **mounting flange** with an integrated 2C seal (also in the screw area) to ensure IP6* protection when mounted with Y-ConCover-10-* and Y-ConCover-40-*

*Universeller **Gehäuseflansch** mit integrierter 2K-Dichtung (auch im Schraubbereich). Damit sind für Y-ConCover-10-* und Y-ConCover-40-* im montierten Zustand die Schutzarten IP6* gewährleistet*

Material:

Flange Body — PBT, UL94V-0
Flanschgehäuse

Flange Seal — TPE, UL94 HB
Flanschdichtung

Specifications:

Operating Temp.: -40°C ~ +120°C
Betriebstemp.

Outline Dimensions

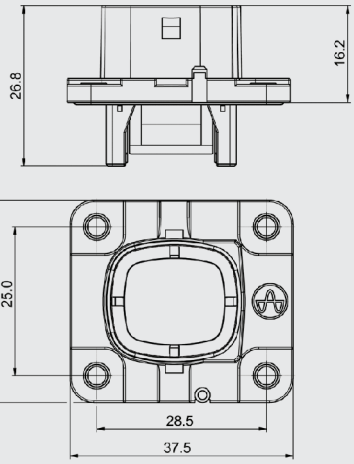

Accessories — Y-ConAS-25

Description:

Flange-head screws M3 Thread
Schrauben (M3-Gewinde)

Material: Steel

Accessories — Part No.: Y-ConAS-24 / Part No.: Y-ConAS-24-LT [1)]

[1)] LT = Low temperature version with HNBR seal

Description:

IP67/68 protective cover for Y-ConFlange-10-*

*IP67-Schutzabdeckung für Y-ConFlange-10-**

Material:

Body — PE
Gehäuse

Colour — Transparent white
Farbe

Seal — FKM (Viton®) or HNBR
Dichtung

Specifications:

Operating Temp.: Std. - 20°C ~ +85°C
Betriebstemp. LT - 40°C ~ +85°C

Accessories — Part No.: Y-ConFlange-Punch-1

Description:

Manual punch to stamp out the Y-ConFlange-** panel cut with matrix for 4 screw holes.
For V2A plate metal up to 2.0mm (Rockwell 56-58)

*Manueller Blechlocher für das Ausstanzen des Ausschnittes für Y-ConFlange-** mit Raster für 4 Schraubenbohrungen. Für V2A Metallblech bis 2,0 mm (Rockwell 56-58)*

Material: Steel

Colour — Black-
Farbe

Panel Cut Dim.
(incl. in Rittal Library)

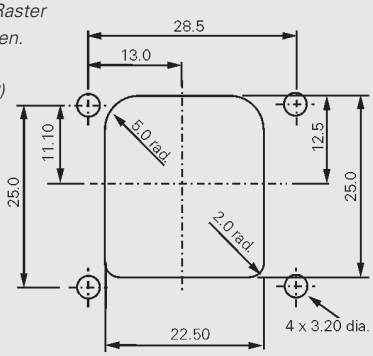

SPECIFICATIONS ARE FOR REFERENCE ONLY AND SUBJECT TO ALTERATION WITHOUT PRIOR NOTICE – DIMENSIONS IN MILLIMETER

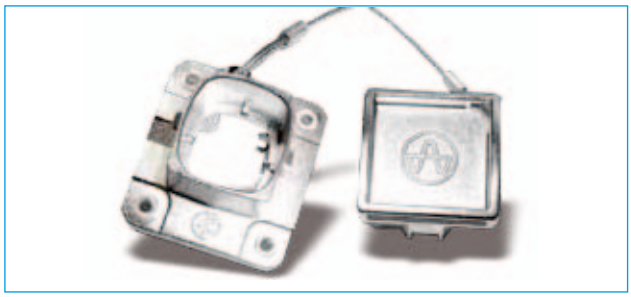

Part Number (Details)

Y-ConFlange - 40 - *

- Series
- Design Number
- No Mark = Std. C = With Cap

Part Number	Protection Cap
Y-ConFlange-40	No
Y-ConFlange-40-C	Yes

Description:

Full metal mounting flange, with integrated seal (also in the screw area) to ensure IP6* protection when mounted with Y-ConCover-10-* and Y-ConCover-40-*. Also available with assembled IP6* protection cap

Vollmetal Gehäuseflansch *mit integrierter Dichtung (auch im Schraubbereich). Damit sind für Y-ConCover-10-* und Y-ConCover-40-* im montierten Zustand die Schutzarten IP6* gewährleistet.A uch mit assemblierter IP6*Schutzkappe verfügbar*

Material:

Flange Body *Flanschgehäuse*	Die-cast zinc
Flange Seal *Flanschdichtung*	HNBR
Protection Cap *Schutzkappe*	Die-cast Zinc
Seal *Dichtung*	HNBR
Wire Rope *Draht*	Steel / Aluminium (length = 180mm)

Specifications:

Operating Temp.: -40°C ~ +120°C
Betriebstemp.

Outline Dimensions

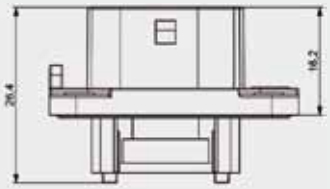

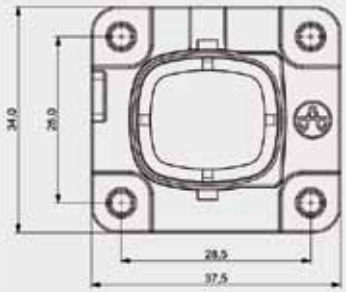

Y-ConFlange-40

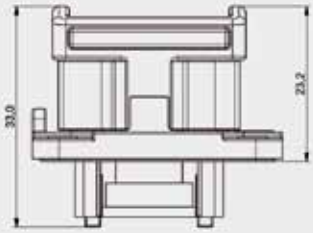

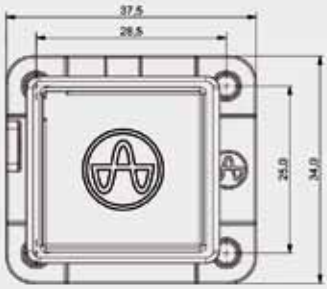

Protection cap (already assembled by wire rope)

Accessories — Part No.: Y-ConFlange-Punch-1

Description:

Manual punch to stamp out the Y-ConFlange-** panel cut with matrix for 4 screw holes.
For V2A plate metal up to 2.0mm (Rockwell 56-58)

*Manueller Blechlocher für das Ausstanzen des Ausschnittes für Y-ConFlange-** mit Raster für 4 Schraubenbohrungen. Für V2A Metallblech bis 2,0 mm (Rockwell 56-58)*

Material: Steel

Colour Black
Farbe

Panel Cut Dim.
(incl. in Rittal Library)

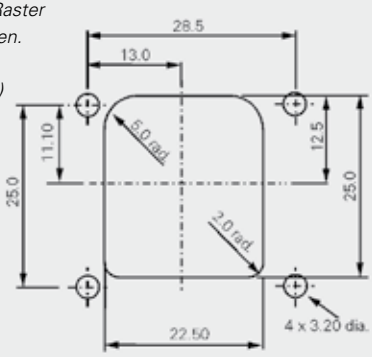

Accessories — Y-ConAS-25

Description:

Flange-head screws M3 Thread
Schrauben (M3-Gewinde)

Material: Steel

TECHNISCHE ÄNDERUNGEN VORBEHALTEN – MASSE IN MILLIMETER

Industrial RJ45 Plugs

Part Number (Details)

Y-ConPlug - * 1

Series

Design Number

Part Number	Signal Contacts	Power Contacts
Y-ConPlug-11	4 (Ethernet)	0
Y-ConPlug-21	4 (Ethernet)	2
Y-ConPlug-31	6	2
Y-ConPlug-41	8	0
Y-ConPlug-51	8	2

Description:

RJ45 cable plug, Cat 5 with integrated cable guide, shielding and cable crimp preventing cable rotation. Ethernet/customised contact wiring, with or without power contacts

RJ45 Kabelstecker *Cat 5 mit integrierter Kabelführung, Schirmung und Kabelcrimp, der das Verdrehen des Kabels verhindert. Ethernet/Kundenspezifische Kontaktverdrahtung mit oder ohne zusätzliche Kontakte für die Stomversorgung*

Material:

Plug body *Steckergehäuse*	PBT, UL94V-0
Shielding *Schirmung*	Nickel plated brass
Contact *Kontakte*	Contact area 30µ"Au over Ni

Specifications:

Operating Temp.: -40°C ~ +120°C
Betriebstemp.

Durability: 1,500 mechanical cycles
Lebensdauer

Current Rating: 2.1A @ 70°C (power contacts)
Bemessungsstrom

Outline Dimensions

Example:
Y-ConPlug-51

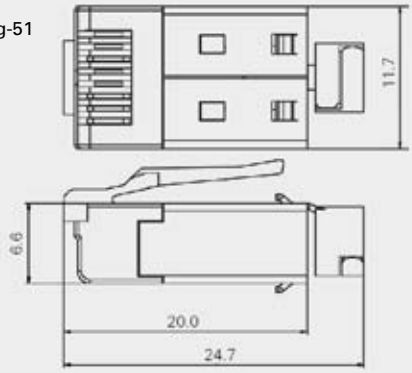

Accessories — Part No.: Y-ConAS-11

Description:

IP20 strain relief for use with all Y-Con plugs. The cable cage allows for flexing with the cable

IP20-Zugentlastung für den Einsatz mit allen Y-Con Kabelsteckern. Die Manschette der Zugentlastung unterstützt die Biegeflexibilität des Kabels

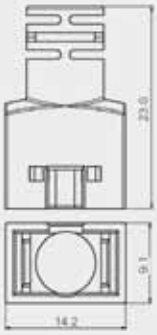

Material: PA66

Specifications:

Operating Temp.: -20°C ~ +120°C
Betriebstemp.

Accessories — Part No.: Y-ConAS-12

IP20 protective transport cap for all Y-Con plugs.

IP20 Transportschutzabdeckung für alle Y-Con Kabelstecker.

Material: PE

Colour: Transparent white
Farbe

Specifications:

Operating Temp.: -20°C ~ +80°C
Betriebstemp.

SPECIFICATIONS ARE FOR REFERENCE ONLY AND SUBJECT TO ALTERATION WITHOUT PRIOR NOTICE – DIMENSIONS IN MILLIMETER

Y-ConIP20Lock-10

Y-ConIP20Lock-20

Part Number (Details)

Y-ConIP20Lock - **

Series

10 = Standard Type
20 = With Locking Slider

Part Number	Type
Y-ConIP20Lock-10	Standard
Y-ConIP20Lock-20	With additional locking slider

Description:

IP20 lock strain relief with vibration resistant locking clips. Also available with additional locking slider for increased mechanical retention. For use with all Y-Con plugs

IP20-Zugentlastung mit vibrationsstabilen Rasthaken.
Auch mit zusätzlichem Schiebeverschluss für verbesserte mechanische Rückhaltekraft verfügbar. Für den Einsatz mit allen Y-Con Kabelsteckern

Material: PA66

Colour: Y-ConIP20Lock-10 (Black)
Farbe Y-ConIP20Lock-20 (Black & White)

Specifications:

Operating Temp.: -20°C ~ +120°C
Betriebstemp.

Outline Dimensions:

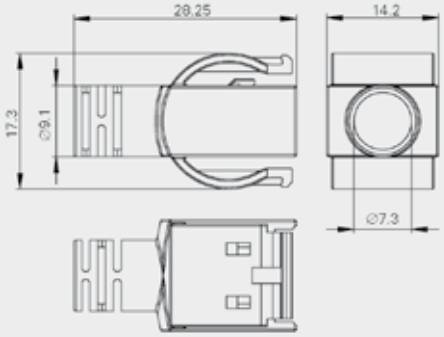

Y-ConIP20Lock-10

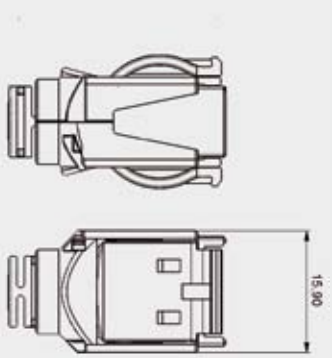

Y-ConIP20Lock-20

Part Number (Details)

Y-ConIP20HFR - *

Series

Number of Holding Frame

Part Number	No. of Holding Frames
Y-ConIP20HFR-10	1
Y-ConIP20HFR-20	2
Y-ConIP20HFR-40	4

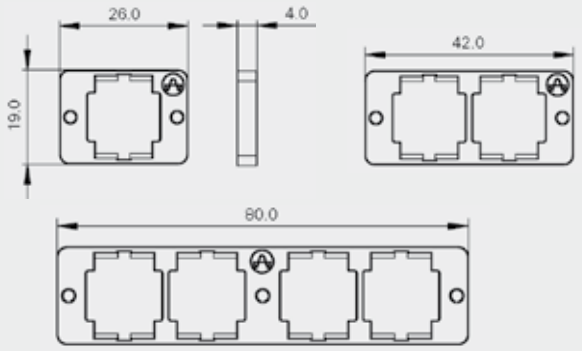

Description:

IP20 holding frames 1x, 2x or 4x format.
For use with all RJ45 and USB IP20Lock products

IP20 Halterahmen *in 1x, 2x oder 4x Ausführung zur Verwendung mit allen RJ45 und USB IP20Lock Produkten*

Specifications: Material PA66 (Black)

Operating Temp.: -20°C ~ +120°C
Betriebstemp.

TECHNISCHE ÄNDERUNGEN VORBEHALTEN – MASSE IN MILLIMETER

Part Number (Details)

Y-ConCover - 20

Series

Design Number

Description:

IP20 EMI metal cover against EMI interference, with integrated latch protection.
For use with all Y-Con plugs

IP20 EMV Metall Steckergehäuse *gegen elektromagnetische Beeinflussung, mit integriertem Verriegelungsschutz.*
Für den Einsatz mit allen Y-Con Kabelsteckern

Material:

Cover *Gehäuse*	Die-cast zinc
Screw *Schraube*	Steel

Specifications:

Operating Temp.: -40°C ~ +80°C
Betriebstemp.

Outline Dimensions

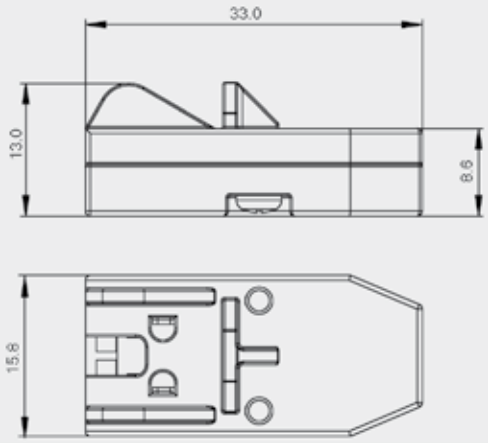

Accessories

Part No.: Y-ConAS-12

IP20 protective transport cap for all Y-Con plugs

IP20 Transportschutz-abdeckung für alle Y-Con Kabelstecker.

Material:

	PE
Colour.: *Farbe*	Transparent white

Specifications:

Operating Temp.: -20°C ~ +80°C
Betriebstemp.

SPECIFICATIONS ARE FOR REFERENCE ONLY AND SUBJECT TO ALTERATION WITHOUT PRIOR NOTICE – DIMENSIONS IN MILLIMETER

Part Number Example

Y-ConC- R ** 2U - **** - **** - *

- Series
- Side 1
- Side 2
- Cable Length
- Wiring

For Part number details: see page 12

For Holding frames: see page 9

Description:

IP20Lock 90° molded cable assembly, with option for an additional colour coded locking slider for increased mechanical retention. Available with various Y-Con plug and cable combinations

IP20Lock 90° umspritzte Kabelkonfektion *mit optionalem-zusätzlichem Schiebeverschluss (farbcodiert) für verbesserte mechanische Rückhaltekraft. Erhältlich in verschiedenen Y-Con Stecker- und Kabelkombinationen*

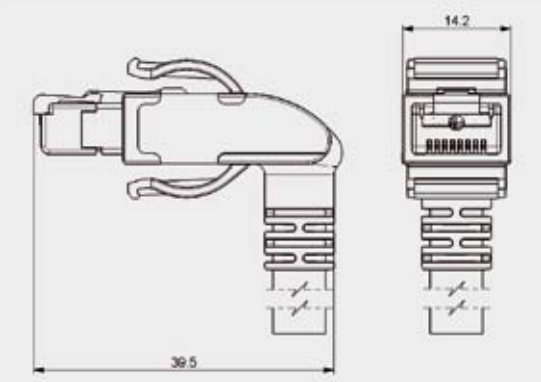

Material: PA66

Specifications:

Operating Temp.: -20°C ~ +120°C

Betriebstemp.

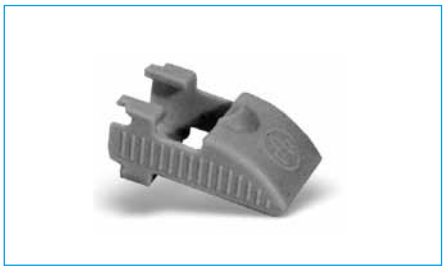

Part Number (Details)

Y-ConIP20Lock-Clip - *

- Series
- Available Colours

Part Number	Available Colours
Y-ConIP20Lock-Clip-1	Red (R-030)
Y-ConIP20Lock-Clip-2	Orange (OR-005)
Y-ConIP20Lock-Clip-3	Yellow (GE-013)
Y-ConIP20Lock-Clip-4	Green (GR-041)
Y-ConIP20Lock-Clip-5	Blue (BL-012)
Y-ConIP20Lock-Clip-6	Grey (G-038)
Y-ConIP20Lock-Clip-7	White (W-040)

Outline Dimensions

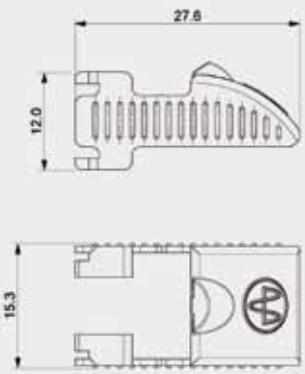

Description:

Colour coded locking slider for Y-ConC-R**2U-****-***** - *

Farbcodierter Schiebeverschluss *für Y-ConC-R**2U-****-***** - *

Material: PA66

Specifications:

Operating Temp.: -20°C ~ +120°C

Betriebstemp.

TECHNISCHE ÄNDERUNGEN VORBEHALTEN – MASSE IN MILLIMETER

Part Number Example for RJ45 Cable Assemblies

Y-ConC	-	R40	6M	-	RJ	2S	-	2000	-	A
Series		RJ45 with 4+0 contacts	IP67 metal cover		RJ45	IP20 with strain relief		Length in mm		Wiring Plan

Part Number (Details)

Y-ConC - *** ** - ** ** - **** - *

Series

Interface side 1

R40 = RJ45, 4+0 contacts
R42 = RJ45, 4+2 contacts
R60 = RJ45, 6+0 contacts
R62 = RJ45, 6+2 contacts
R80 = RJ45, 8+0 contacts
R82 = RJ45, 8+2 contacts

Protection side 1

6P = IP67 plastic cover
6M = IP67 metal cover
2S = IP20 strain relief
2L = IP20Lock strain relief
2U = IP20Lock 90° molded
2M = IP20 metal cover
CU = customer specific

Interface side 2

RJ = RJ45
CU = customer specific
FE = free end (cut only)

Protection side 2

6P = IP67 plastic cover
6M = IP metal cover
2S = IP20 strain relief
2L = IP20Lock strain relief
2U = IP20Lock 90° moulded
2M = IP20 metal cover
CU = customer specific

Length in mm

Wiring Plan A = T568A 1:1, B = T568A crossover, C = T568B 1 :1, D = T568B crossover, F = Custom

SPECIFICATIONS ARE FOR REFERENCE ONLY AND SUBJECT TO ALTERATION WITHOUT PRIOR NOTICE – DIMENSIONS IN MILLIMETER

Possible Cover Variations

Y-ConPlug-**
for all these
Y-Con covers

IP6* plastic cover

IP6* metal cover

IP20 strain relief

IP20Lock strain relief

IP20Lock 90° molded

IP20 metal cover

Possible Wiring Diagrams

T568A 1 : 1

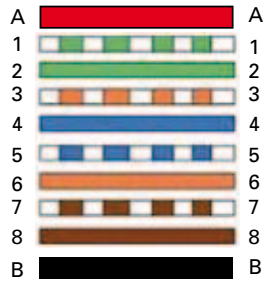

T568A Crossover

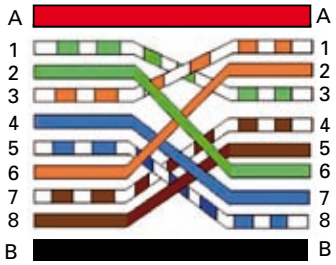

T568B 1 : 1

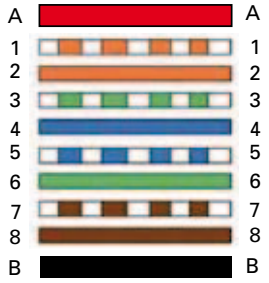

T568B Crossover

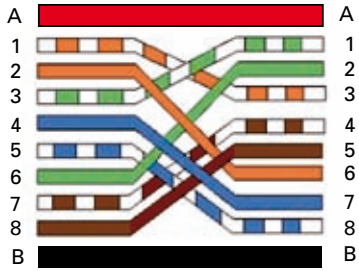

Note: Y-ConPlug-11, -12 and -31 use only signal contacts 1, 2, 3 & 6.
A and B are optional power contacts

TECHNISCHE ÄNDERUNGEN VORBEHALTEN – MASSE IN MILLIMETER

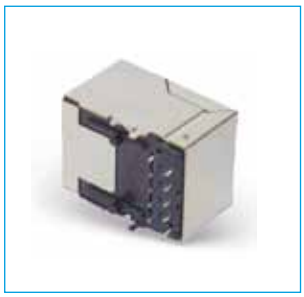

Part Number (Details)

Y-ConJack - * * - *

- Series
- Power Contacts 1 = without 2 = with
- 1 = 90° 2 = 180°
- See remarks in table below

Part Number	Signal Contacts	Power Contacts	Orientation	Remarks
Y-ConJack-11	8	0	90°	PCB-Lock
Y-ConJack-21	8	2	90°	PCB-Lock
Y-ConJack-21-PP	8	2	90°	Positioning pins
Y-ConJack-12	8	0	180°	Positioning pins
Y-ConJack-22-THR	8	2	180°	for THR soldering
Y-ConJack-22-WAVE	8	2	180°	for Wave soldering

Description:

RJ45 jack 90° and 180°, Cat 5, with improved shielding. Available with additional power contacts. For use with all Y-Con plugs

RJ45 Buchse *90° und 180° ,Cat 5, mit verbesserter Schirmung. Auch mit zusätzlichen Kontakten für die Stromversorgung verfügbar. Für den Einsatz mit allen Y-Con Kabelsteckern*

Accessories

Part No.: Y-ConAS-13

Description:

IP20 dummy plug for all RJ45 jacks

IP20 Dummy-Stecker für alle RJ45 Buchsen

Material:

Jack body *Isolierkörper*	PA, UL94V-0
Shielding *Schirmung*	Nickel plated brass
Contact *Kontakte*	Contact area 30µ"Au/50µ"Ni Solder area 80µ"Sn/50µ"Ni

Specifications:

Operating Temp.: *Betriebstemp.*	-40°C ~ +120°C
Solder Temp: *Löttemp.*	Reflow max. 260°C / 10sec. Wave min. 235°C / 3 sec. (only for Y-ConJack-21-PP and Y-ConJack-22- WAVE)
Durability: *Lebensdauer*	1,500 mechanical cycles
Current Rating: *Bemessungsstrom*	2.1A @ 70°C (power contacts)

Outline Dimensions

Y-ConJack-11

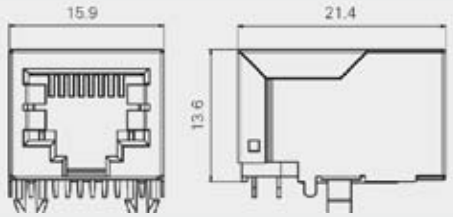

PCB Layout

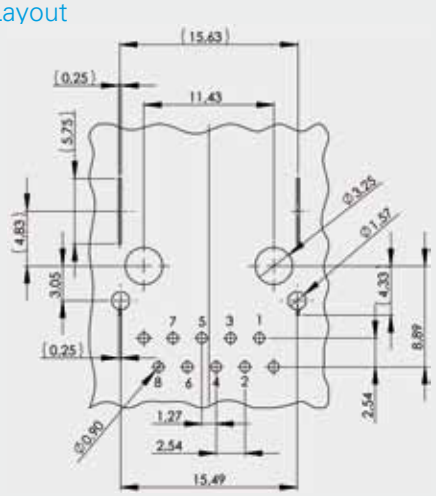

SPECIFICATIONS ARE FOR REFERENCE ONLY AND SUBJECT TO ALTERATION WITHOUT PRIOR NOTICE – DIMENSIONS IN MILLIMETER

Outline Dimensions

PCB Layout

Y-ConJack-21

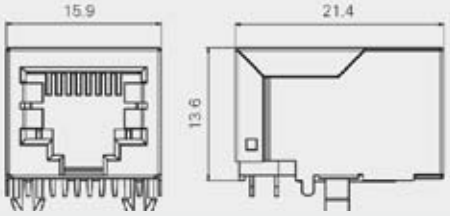

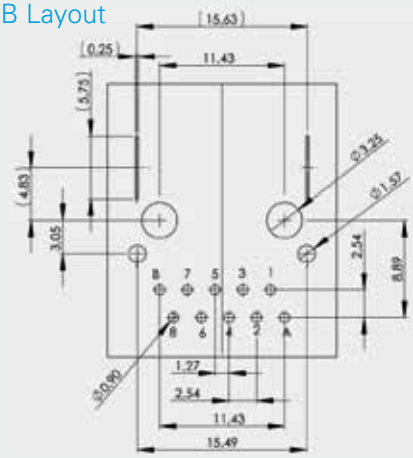

Y-ConJack-21-PP

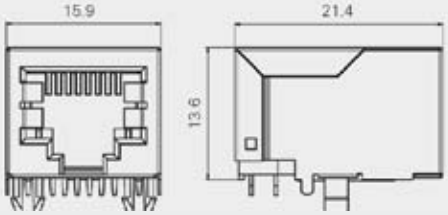

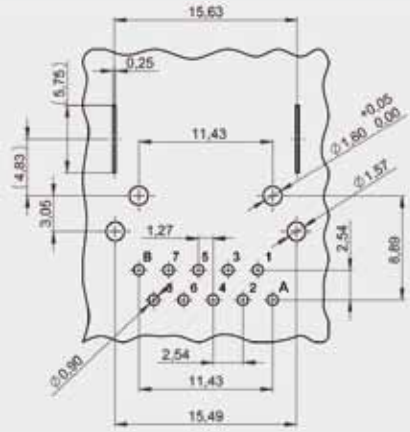

Y-ConJack-12

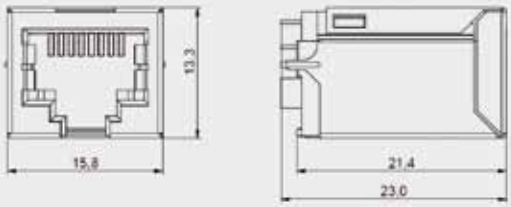

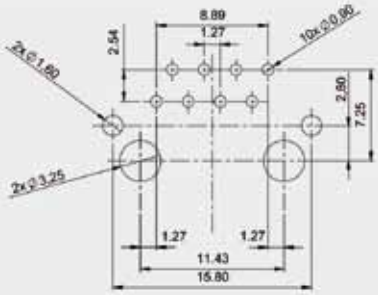

Y-ConJack-22-THR

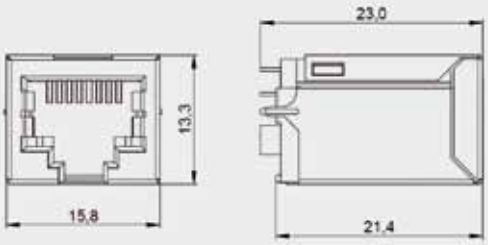

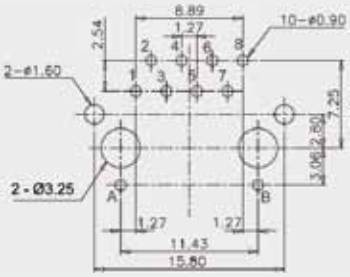

Y-ConJack-22-WAVE

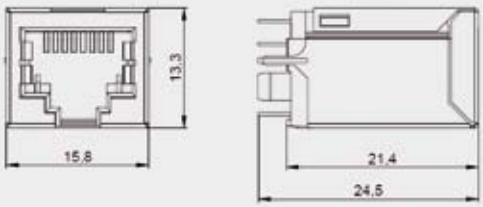

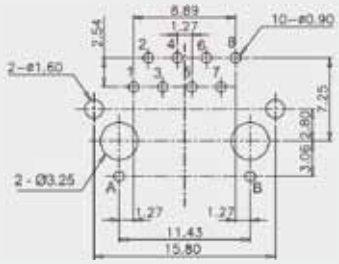

TECHNISCHE ÄNDERUNGEN VORBEHALTEN – MASSE IN MILLIMETER

Part Number (Details)

Y-ConJack - 3 *

- Series
- 3 = 90°
- See table below

Part Number	Signal Contacts	Power Contacts	Orientation	Magnetics	Light Pipes
Y-ConJack-31	8	2	90°	Yes	Yes
Y-ConJack-32	8	2	90°	Yes	No
Y-ConJack-33	8	2	90°	No	Yes
Y-ConJack-34	8	2	90°	No	No
Y-ConJack-35	8	0	90°	Yes	Yes
Y-ConJack-36	8	0	90°	Yes	No

Description:

RJ45 jack 90° with magnetics and light pipes.
For THR soldering. Also available with power contacts.
For different combinations please see table above.
Light pipes enable the usage of the same jack even for different LED colours. For use with all Y-Con plugs

RJ45-Buchse 90° mit Magnetic-Baustein und Lichtleiter *für THR-Verlötung. Auch mit zusätzlichen Kontakten für die Stromversorgung. Verschiedene Kombinationsmöglichkeiten siehe lt. Tabelle. Lichtleiter ermöglicht die Verwendung der identischen Buchse für verschiedenfarbige LEDs.*

Outline Dimensions

Y-ConJack-31

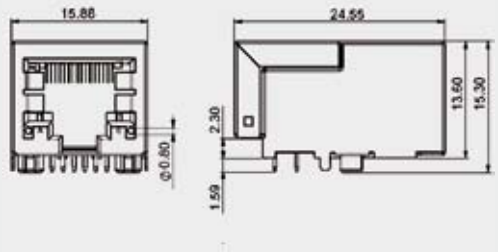

PCB Layout

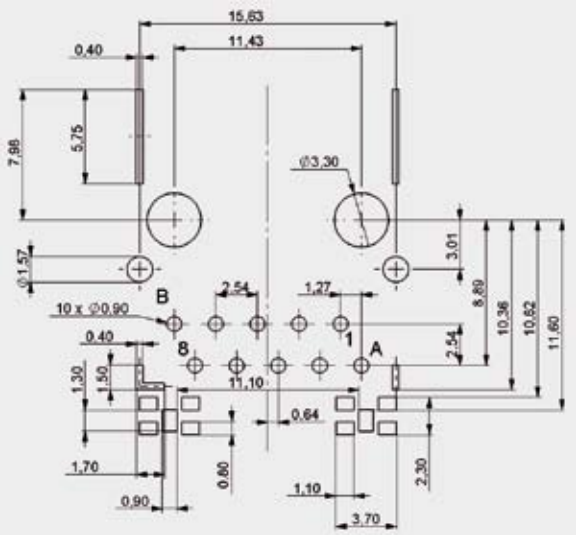

Material:

Jack body *Isolierkörper*	PA, UL94V-0
Shielding *Schirmung*	Nickel plated brass
Contact *Kontakte*	Contact area 30µ"Au/50µ"Ni Solder area 80µ"Sn/50µ"Ni

Specifications:

Oper. Temp.: *Betriebstemp.*	-40°C ~ +120°C
Solder Temp: *Löttemp.*	Reflow max. 260°C / 10sec.
Durability: *Lebensdauer*	1,500 mechanical cycles
Current Rating: *Bemessungsstrom*	2.1A @ 70°C (power contacts)

SPECIFICATIONS ARE FOR REFERENCE ONLY AND SUBJECT TO ALTERATION WITHOUT PRIOR NOTICE – DIMENSIONS IN MILLIMETER

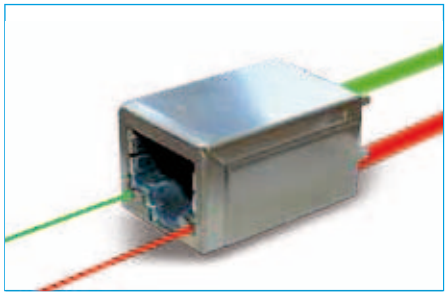

Part Number (Details)

Y-ConJack - 5 *

- Series
- 5 = 180°
- See table below

Part Number	Signal Contacts	Power Contacts	Orientation	Magnetics	Light Pipes
Y-ConJack-51	8	2	180°	Yes	Yes
Y-ConJack-52	8	2	180°	Yes	No
Y-ConJack-53	8	2	180°	No	Yes
Y-ConJack-54	8	2	180°	No	No
Y-ConJack-55	8	0	180°	Yes	Yes
Y-ConJack-56	8	0	180°	Yes	No

Description:

RJ45 jack 180° with magnetics and light pipes.
For THR soldering. Also available with power contacts.
For different combinations please see table above.
Light pipes enable the usage of the same jack even for different LED colours. For use with all Y-Con plugs

RJ45-Buchse 180° mit Magnetic-Baustein und Lichtleiter *für THR-Verlötung. Auch mit zusätzlichen Kontakten für die Stromversorgung. Verschiedene Kombinationsmöglichkeiten siehe lt. Tabelle. Lichtleiter ermöglicht die Verwendung der identischen Buchse für verschiedenfarbige LEDs.*

Outline Dimensions

Y-ConJack-51

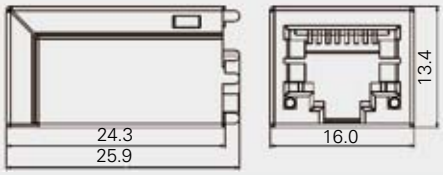

PCB Layout

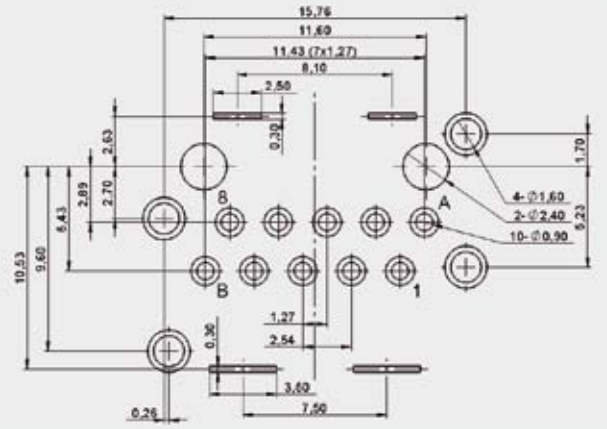

Material:

Jack body *Isolierkörper*	PA, UL94V-0
Shielding *Schirmung*	Nickel plated brass
Contact *Kontakte*	Contact area 30µ"Au/50µ"Ni Solder area 80µ"Sn/50µ"Ni

Specifications:

Oper. Temp.: *Betriebstemp.*	-40°C ~ +120°C
Solder Temp: *Löttemp.*	Reflow max. 260°C / 10sec.
Durability: *Lebensdauer*	1,500 mechanical cycles
Current Rating: *Bemessungsstrom*	2.1A @ 70°C (power contacts)

TECHNISCHE ÄNDERUNGEN VORBEHALTEN – MASSE IN MILLIMETER

Part Number (Details)

Y-ConJack - * 1 - 3C - *

- Series
- Power Contacts 1 = without 2 = with
- 1 = 90°
- 3C = EMI version
- * = Shielding (see table below)

Part Number	Signal Contacts	Power Contacts	Orientation	Shielding Orientation
Y-ConJack-11-3C-1	8	0	90°	left
Y-ConJack-11-3C-2	8	0	90°	top
Y-ConJack-11-3C-3	8	0	90°	right
Y-ConJack-11-3C-4	8	0	90°	left + top
Y-ConJack-11-3C-5	8	0	90°	right + top
Y-ConJack-11-3C-6	8	0	90°	right + left
Y-ConJack-11-3C-7	8	0	90°	left + top + right
Y-ConJack-21-3C-1	8	2	90°	left
Y-ConJack-21-3C-2	8	2	90°	top
Y-ConJack-21-3C-3	8	2	90°	right
Y-ConJack-21-3C-4	8	2	90°	left + top
Y-ConJack-21-3C-5	8	2	90°	right + top
Y-ConJack-21-3C-6	8	2	90°	right + left
Y-ConJack-21-3C-7	8	2	90°	left + top + right

Description:

RJ45 EMI jack, Cat 5, 90° for THR soldering. Available also with power contacts. Additional shield clips for improved EMI performance. For use with all Y-Con plugs

RJ45 EMV Buchse *Cat 5, 90° für THR-Verlötung. Auch mit Kontakten für die Stromversorgung. Zusätzliche Schirmfedern verbessern die EMV Eigenschaften. Für den Einsatz mit allen Y-Con Kabelsteckern*

Outline Dimensions / PCB Layout

Example Y-ConJack-21-3C-7

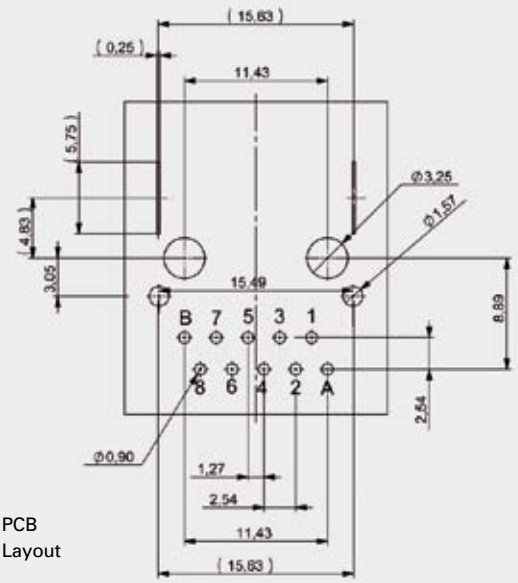

PCB Layout

Material:

Jack body *Isolierkörper*	PA, UL94V-0
Shielding Shield Clips *Schirmung*	Nickel plated brass Stainless Steel
Contact *Kontakte*	Contact area 30µ"Au/50µ"Ni Solder area 80µ"Sn/50µ"Ni

Specifications:

Oper. Temp.: *Betriebstemp.*	-40°C ~ +120°C
Solder Temp: *Löttemp.*	Reflow max. 260°C / 10sec. .
Durability: *Lebensdauer*	1,500 mechanical cycles
Current Rating: *Bemessungsstrom*	2.1A @ 70°C (power contacts)

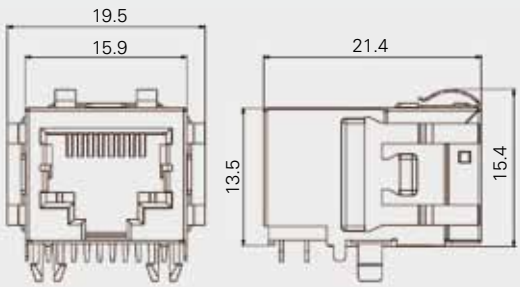

SPECIFICATIONS ARE FOR REFERENCE ONLY AND SUBJECT TO ALTERATION WITHOUT PRIOR NOTICE – DIMENSIONS IN MILLIMETER

Adapter for
Y-ConJack-16K

Adapter for
Y-ConJack-16KM

Part Number (Details)

Y-ConJack - 16 K M

- Series
- Design Number
- K = for use with Y-ConFlange-10-* only
- KM = for use with Y-ConFlange-40-* only

Description:

RJ45, Cat 6, shielded Keystone jack 8 pin
tool free. (Cat 6 i.a.w. ANSI / TIA / EIA 568-B.2-1)
For AWG 24-26 (insulation ∅1.0 - 1.6mm).
For use with Y-ConFlange-10-* or Y-ConFlange-40-*

RJ45, Cat 6, geschirmte Buchse *8-polig, werkzeuglos.*
(Cat 6 nach ANSI / TIA / EIA 568-B.2-1). Für AWG 24-26 (Isolation ∅1.0 - 1.6mm).
Für den Einsatz mit Y-ConFlange-10- oder Y-ConFlange-40-**

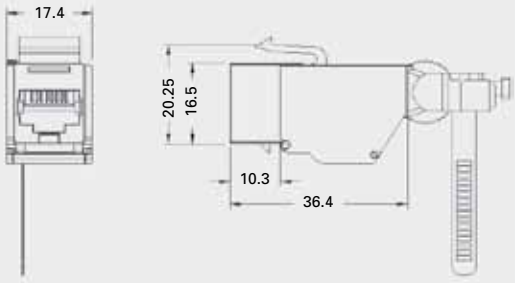

Material

Jack body RJ45 body *Isolierkörper*	Die-cast zinc PA46
RJ45 shield *Schirmung*	Tin Plated Brass
RJ45 contact IDC contact *Kontakte*	40µ" Au/CuBe CuZn37

Specifications:

Operating Temp.: *Betriebstemp.*	-40°C ~ +80°C
Durability: *Lebensdauer*	750 mechanical cycles

Adapter for
Y-ConJack-16

Adapter for
Y-ConJack-16M

Part Number (Details)

Y-ConJack - 16 M

- Series
- 16 = for use with Y-ConFlange-10-* only
- M = for use with Y-ConFlange-40-* only

Description:

RJ45 180° coupler jack, Cat 5, with 8 pin 1:1 wiring, (including flange adapter and locking clip). For use with Y-ConFlange-10-* or Y-ConFlange-40-*

RJ45 180°-Verbindungsbuchse, *Cat 5,mit 8-poliger1:1-Verdrahtung*
(inklusive Flansch-Adapter und Stopper-Keil). Für den Einsatz mit Y-ConFlange-10- oder Y-ConFlange-40-**

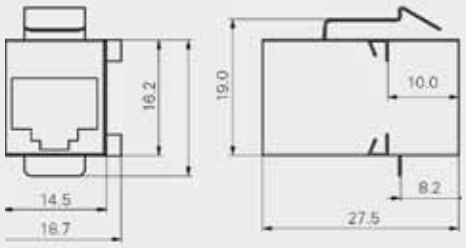

Material

Jack body *Isolierkörper*	PBT, UL94V-0
Shielding *Schirmung*	Stainless Steel
Contact *Kontakte*	Contact area Au/Ni
Adapter / Locking Clip	PBT, UL94V-0 PA, UL94V-0

Specifications:

Operating Temp.: *Betriebstemp.*	-20°C ~ +80°C
Durability: *Lebensdauer*	750 mechanical cycles

TECHNISCHE ÄNDERUNGEN VORBEHALTEN – MASSE IN MILLIMETER

Y-ConJack-13 / -23

Y-ConJack-14 / -24

Part Number (Details)

Y-ConJack - * *

- Series
- Power Contacts 1 = w/o. 2 = with
- Design Number

Part Number	Signal Contacts	Power Contacts	Orientation	PCB
Y-ConJack-13	8	0	90°	with solder pads
Y-ConJack-23	8	2	90°	with solder pads
Y-ConJack-14	8	0	90°	with terminals
Y-ConJack-24	8	2	90°	with terminals

Description:

RJ45 PCB mounted jacks, Cat 5, with or without power contacts. For use with Y-ConFlange-10-*, Y-ConFlange-40-* and all Y-Con plugs

***RJ45 Buchse auf PCB**, Cat 5, mit oder ohne zusätzliche Kontakte für die Stromversorgung. Für den Einsatz mit Y-ConFlange-10-*, Y-ConFlange-40-* und allen Y-Con Kabelsteckern*

Material:

Jack body *Isolierkörper*	PA, UL94V-0
Shielding *Schirmung*	Nickel plated brass
Contact *Kontakte*	Contact area 30µ"Au/50µ"Ni
PCB	FR4, UL94V-0

Specifications:

Oper. Temp.: *Betriebstemp.*	-40°C ~ +120°C
Durability: *Lebensdauer*	1,500 mechanical cycles
Current Rating: *Bemessungsstrom*	2.1A @ 70°C (power contacts)

Outline Dimensions

Y-ConJack-13 / -23

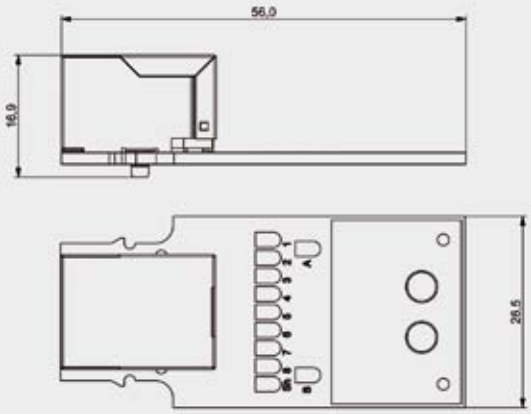

Y-ConJack-14 / -24

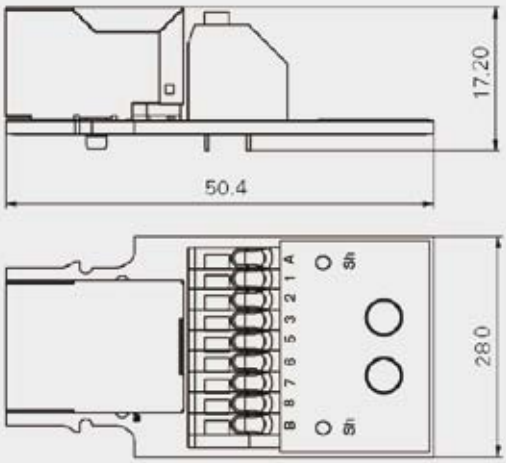

SPECIFICATIONS ARE FOR REFERENCE ONLY AND SUBJECT TO ALTERATION WITHOUT PRIOR NOTICE – DIMENSIONS IN MILLIMETER

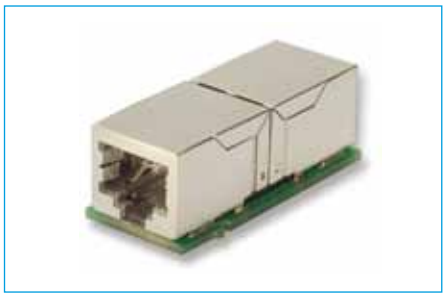

Part Number (Details)

Y-ConJack - * *

- Series
- Power Contacts 1 = without 2 = with
- Design Number

Part Number	Signal Contacts	Power Contacts	Orientation	PCB
Y-ConJack-15	4	0	90°	Coupler Jack (wiring crossover)
Y-ConJack-25	4	2	90°	Coupler Jack (wiring crossover)

Description:

RJ45 coupler jacks PCB mounted, Cat 5, with 4 pin crossover wiring, with or without power contacts. For use with Y-ConFlange-10-*,Y-ConFlange-40-* and all Y-Con plugs

RJ45 Verbindungsbuchse *auf PCB, Cat 5, mit 4-poliger Crossover-Verdrahtung, mit oder ohne zusätzliche Kontakte für die Stromversorgung. Für den Einsatz mit Y-ConFlange-10-*, Y-ConFlange-40-* und allen Y-Con Kabelsteckern*

Material:

Jack body *Isolierkörper*	PA, UL94V-0
Shielding *Schirmung*	Nickel plated brass
Contact *Kontakte*	Contact Area 30µ"Au/50µ"Ni
PCB	FR4, UL94V-0

Specifications:

Oper. Temp.: *Betriebstemp.*	-40°C ~ +120°C
Durability: *Lebensdauer*	1,500 mechanical cycles
Current Rating: *Bemessungsstrom*	2.1A @ 70°C (power contacts)

Outline Dimensions

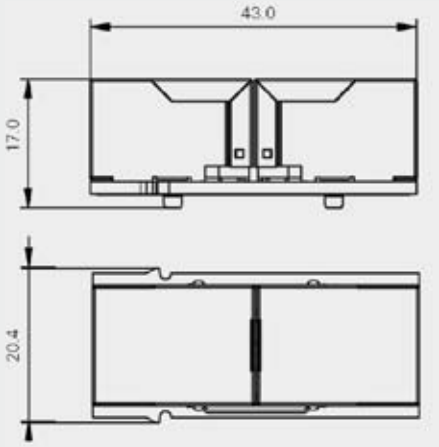

Wiring Diagram for Y-ConJack-15

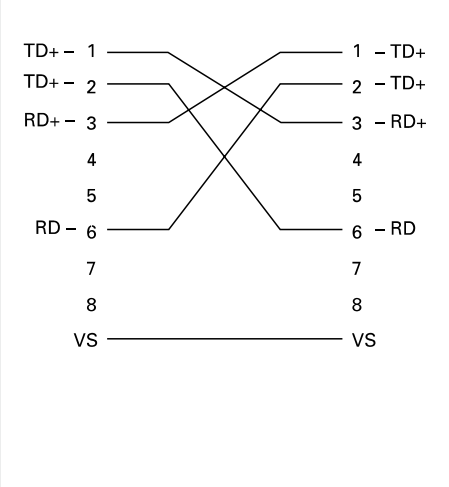

Wiring Diagram for Y-ConJack-25

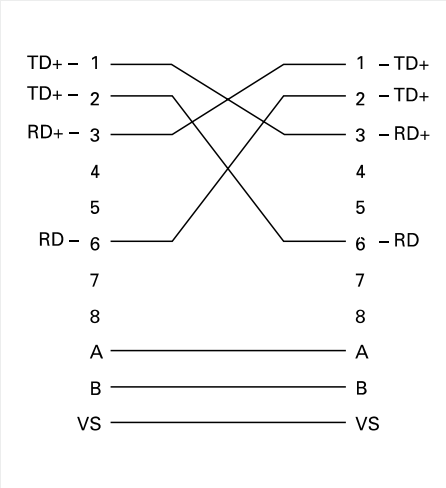

TECHNISCHE ÄNDERUNGEN VORBEHALTEN – MASSE IN MILLIMETER

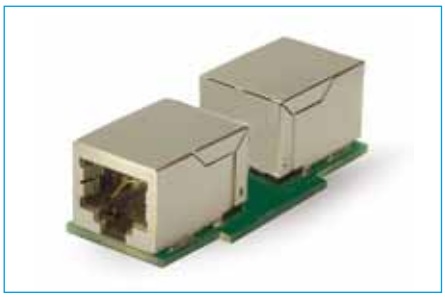

Part Number (Details)

Y-ConJack - 2 *C

- Series
- With Power Contacts
- Design Number

Part Number	Signal Contacts	Power Contacts	Orientation	PCB
Y-ConJack-25C	4	2	90°	Coupler Jack (wiring crossover)
Y-ConJack-26C	8	2	90°	Coupler Jack (wiring 1: 1)

Description:

RJ45 coupler jacks PCB mounted Cat 5.
With power contacts and crossover or 1:1 wiring.
For use with Y-ConCoupler-10-*

RJ45 Verbindungsbuchse *auf PCB, Cat 5, Crossover oder 1 : 1 Vedrahtung. Mit zusätzlichen Kontakten für die Stromversorgung. Für den Einsatz mit Y-ConCoupler-10-**

Material:

Jack body *Isolierkörper*	PA, UL94V-0
Shielding *Schirmung*	Nickel plated brass
Contact *Kontakte*	Contact Area 30µ"Au/50µ"Ni
PCB	FR4, UL94V-0

Specifications:

Oper. Temp.: *Betriebstemp.*	-40°C ~ +120°C
Durability: *Lebensdauer*	1,500 mechanical cycles
Current Rating: *Bemessungsstrom*	2.1A @ 70°C (power contacts)

Outline Dimensions

Y-ConJack-25C / -26C

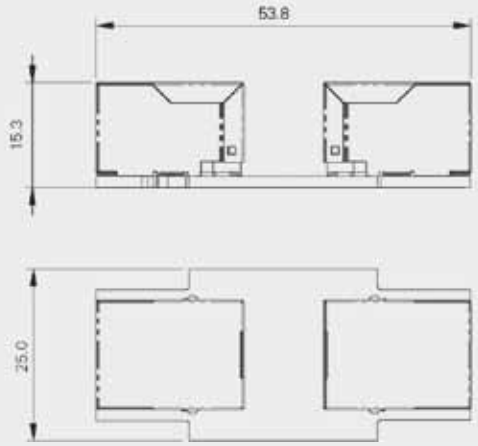

Wiring Diagram for Y-ConJack-25C

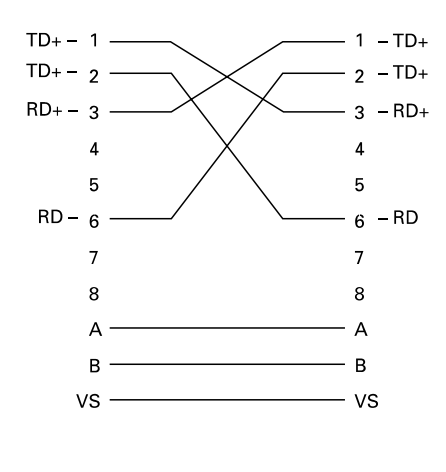

Wiring Diagram for Y-ConJack-26C

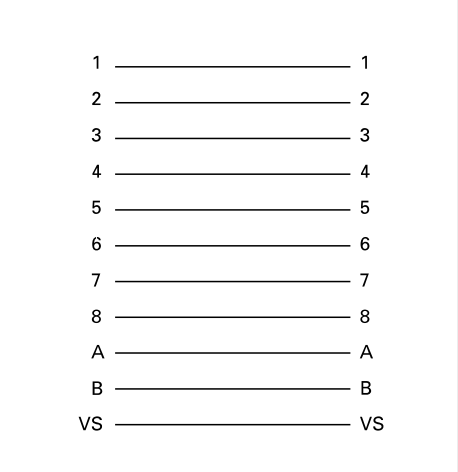

SPECIFICATIONS ARE FOR REFERENCE ONLY AND SUBJECT TO ALTERATION WITHOUT PRIOR NOTICE – DIMENSIONS IN MILLIMETER

Part Number Y-ConTool-11

Description:

1-step crimp tool for all Y-Con RJ45 plugs.
Crimps all contacts and fixes the square crimp in one action

Einstufige Crimpzange für alle Y-Con RJ45 Stecker.
Crimpt alle Kontakte und die quadratische
Zugentlastung in einem Arbeitsgang

Part Number Y-ConTool-20

Description:

Cable stripping tool with adjustable blades

Abisolierwerkzeug für die Kabelummantelung
mit verstellbaren Klingen

Part Number Y-ConTool-30

Description:

Cable-to-Plug assembly tool

Hilfswerkzeug für die Steckermontage

For assembly instructions please see our web site under:
⇨ Products - Y-Con Industrial Series - Assembly Instructions
(including films and the PDF file www.yamaichi.de/fdhtml/442_fdhtml/crimptool11.pdf)

Montageanleitungen stehen auf unserer Website zur Verfügung unter:
⇨ Products - Y-Con Industrial Series - Assembly Instructions
(mit Filmen sowie der PDF-Datei www.yamaichi.de/fdhtml/442_fdhtml/crimptool11.pdf)

Description:

100 Mbit, Cat 5 (Cat 5e), digital signal cable.
Silicon and CFC free

100 Mbps, Cat 5 (Cat 5e), Kabel für digitale Signale.
Silikon- und FCKW frei

Part Number (Details)

Y-ConCable - *

Series

See table below

Part Number Y-ConCable-1

Suitable for Y-ConPlug-21

Signal	Power	Jacket	Temp.	Cable OD	Cable Chain	Bending Radius	Bending Cycles
2 x 2	2	PVC	-20°C ~ +80°C	6.9mm	No	125mm multiple turns	max. 100,000
AWG 24/7 0.22mm²	AWG 22/19 0.38mm²	Green		(+0.1)		35mm single turn	

Part Number Y-ConCable-2

Suitable for Y-ConPlug-11

Signal	Power	Jacket	Temp.	Cable OD	Cable Chain	Bending Radius	Bending Cycles
2 x 2	0	PVC	-20°C ~ +80°C	6.85mm	No	min. 50mm single turn	-
AWG 24/7 0.22mm²		Grey		(+/-0.15)			

Part Number Y-ConCable-3

Suitable for Y-ConPlug-21

Signal	Power	Jacket	Temp.	Cable OD	Cable Chain	Bending Radius	Bending Cycles
2 x 2	2	PUR	-20°C ~ +80°C	6.8mm	Yes	70mm multiple turns	max. 1 million
AWG 26/7 0.14mm²	AWG 22/7 0.34mm²	Green		(+0.2)		35mm single turn	

Part Number Y-ConCable-4

Suitable for Y-ConPlug-41

Signal	Power	Jacket	Temp.	Cable OD	Cable Chain	Bending Radius	Bending Cycles
4 x 2	0	PUR	-20°C ~ +70°C	6.8mm	Yes	68mm	max. 1 million
AWG 26/7 0.14mm²		Green		(+0.1/-0.3mm)			

Part Number Y-ConCable-7 for ProfiNet

Suitable for Y-ConPlug-15

Signal	Power	Jacket	Temp.	Cable OD	Cable Chain	Bending Radius	Bending Cycles
4 *	0	PUR	-20°C ~ +80°C	6.8mm	Yes	102mm multiple turns	max. 2.5 million
AWG 22/7 0.34mm²		Green		(+0.2)			

Part Number Y-ConCable-10

Suitable for Y-ConPlug-51

Signal	Power	Jacket	Temp.	Cable OD	Cable Chain	Bending Radius	Bending Cycles
4 x 2	2	PUR	-20°C ~ +70°C	6.9mm	Yes	70mm multiple turns	max. 1 million
AWG 26/7 0.14mm²	AWG 23/19 0.25mm²	Green		(+0.1)			

SPECIFICATIONS ARE FOR REFERENCE ONLY AND SUBJECT TO ALTERATION WITHOUT PRIOR NOTICE – DIMENSIONS IN MILLIMETER

Conductor Resistance	Insulation Resistance	Dielectric Strength	Capacitance	Characteristic Impedance	Near-end Crosstalk	Flame Resistance	Halogen Free
Data ≤90Ω x km	≥1GΩ x km	500V / 50Hz	50nF / km	100 +/- 15Ω	100Mhz	IEC 332-1	No
Power ≤55Ω x km		for 1 min	at 800Hz	at 1Mhz to 100Mhz	> 32dB / 100m		

Conductor Resistance	Insulation Resistance	Dielectric Strength	Capacitance	Characteristic Impedance	Near-end Crosstalk	Flame Resistance	Halogen Free
Data ≤90Ω x km	≥1GΩ x km	500V / 50Hz	50nF / km	100 +/- 15Ω	100Mhz	IEC 332-1	No
		for 1 min	at 800Hz	at 1Mhz to 100Mhz	> 32dB / 100m		

Conductor Resistance	Insulation Resistance	Dielectric Strength	Capacitance	Characteristic Impedance	Near-end Crosstalk	Flame Resistance	Halogen Free
Data ≤140Ω x km	≥1GΩ x km	500V / 50Hz	50nF / km	100 +/- 15Ω	100Mhz	IEC 332-1	Yes
Power ≤62Ω x km		for 1 min	at 800Hz	at 1Mhz to 100Mhz	> 32dB / 100m		

Conductor Resistance	Insulation Resistance	Dielectric Strength	Capacitance	Characteristic Impedance	Near-end Crosstalk	Flame Resistance	Halogen Free
Data ≤140Ω x km	≥140MΩ x km	700V / 50Hz	48nF / km	100 +/- 15Ω	100Mhz	UL- Style 20963	Yes
		for 1 min	at 1,000Hz	at 1Mhz to 100Mhz	> 32dB / 100m		

Conductor Resistance	Insulation Resistance	Dielectric Strength	Capacitance	Characteristic Impedance	Near-end Crosstalk	Flame Resistance	Halogen Free
Data ≤60Ω x km	≥500MΩ x km	2,000V / 50Hz	53nF / km	100 +/- 15Ω	100Mhz	UL- Style 20963	Yes
		for 1 min	at 800Hz	at 1Mhz to 100Mhz	> 50dB / 100m		

Conductor Resistance	Insulation Resistance	Dielectric Strength	Capacitance	Characteristic Impedance	Near-end Crosstalk	Flame resistance	Halogen Free
Data ≤140Ω x km	≥150MΩ x km	1,000V / 50Hz	48nF / km	100 +/- 15Ω	100Mhz	UL- Style 20963	Yes
Power ≤75Ω x km		for 1 min	at 1,000Hz	at 1Mhz to 100Mhz	> 35dB / 100m		

IP67 / 68 / 69K Field Kits

Y-ConCover-10
Y-ConCover-10-B (black)

Y-ConAS-22

Y-Con Stopper

Y-ConAS-23
Y-ConAS-23-B (black)

Y-ConPlug-**

Insert

Description:

IP67/68/69K RJ45
field kit for self-assembly

Part Number (Details)

Y-ConKit - 2*

Series

See table below

IP67/68/69K RJ45 Konfektionierungs-Kit zur Selbstmontage

Part Number	Cover	Terminator Cap	Plug	Signal Contacts	Power Contacts
Y-ConKit-20	Y-ConCover-10	Y-ConAS-23	Y-ConPlug-11	4 (Ethernet)	0
Y-ConKit-20-B	Y-ConCover-10-B	Y-ConAS-23-B	Y-ConPlug-11	4 (Ethernet)	0
Y-ConKit-21	Y-ConCover-10	Y-ConAS-23	Y-ConPlug-21	4 (Ethernet)	2
Y-ConKit-21-B	Y-ConCover-10-B	Y-ConAS-23-B	Y-ConPlug-21	4 (Ethernet)	2
Y-ConKit-21-B-LT	Y-ConCover-10-B-LT	Y-ConAS-23-B	Y-ConPlug-21	4 (Ethernet)	2
Y-ConKit-23	Y-ConCover-10	Y-ConAS-23	Y-ConPlug-31	6	2
Y-ConKit-24	Y-ConCover-10	Y-ConAS-23	Y-ConPlug-41	8	0
Y-ConKit-24-B	Y-ConCover-10-B	Y-ConAS-23-B	Y-ConPlug-41	8	0
Y-ConKit-24-B-LT	Y-ConCover-10-B-LT	Y-ConAS-23-B	Y-ConPlug-41	8	0
Y-ConKit-26	Y-ConCover-10	Y-ConAS-23	Y-ConPlug-51	8	2

IP67 / 68 / 69K Field Kits (EMI)

Y-ConCover-10-E
Y-ConCover-10-B-E (black)

Y-ConAS-22

Y-Con Stopper

Y-ConAS-23
Y-ConAS-23-B (black)

Y-ConPlug-**

Insert

Description:

IP67/68/69K EMI RJ45
Field kit for self-assembly

Part Number (Details)

Y-ConKit - 2*

Series

See table below

IP67/68/69K EMV RJ45 Konfektionierungs-Kit zur Selbstmontage

Part Number	Cover	Terminator Cap	Plug	Signal Contacts	Power Contacts
Y-ConKit-21-E	Y-ConCover-10-E	Y-ConAS-23	Y-ConPlug-21	4 (Ethernet)	2
Y-ConKit-21-B-E	Y-ConCover-10-B-E	Y-ConAS-23-B	Y-ConPlug-21	4 (Ethernet)	2

IP67 / 68 / 69K Flange Field Kits

Y-ConFlange-10
Y-ConFlange-10-B (black)

Y-ConAS-24

Description:

IP67/68/69K RJ45
Flange field kit for
self-assembly

Part Number (Details)

Y-ConKit - 3*

Series

See table below

IP67 RJ45 Flansch Konfektionierungs-Kit zur Selbstmontage

Part Number	Flange	Protection Cap
Y-ConKit-30	Y-ConFlange-10	Y-ConAS-24
Y-ConKit-30-B	Y-ConFlange-10-B	Y-ConAS-24

SPECIFICATIONS ARE FOR REFERENCE ONLY AND SUBJECT TO ALTERATION WITHOUT PRIOR NOTICE – DIMENSIONS IN MILLIMETER

IP67 / 68 / 69K Field Kits

Y-ConCover-40

Y-ConPlug-**

Description:

IP67/68/69K RJ45 Field kit for self-assembly (metal)

IP67/68/69K RJ45 Konfektionierungs Kit zur Selbstmontage

Part Number (Details)

Y-ConKit - 4*

Series

See table below

Part Number	Cover	Plug	Signal Contacts	Power Contacts
Y-ConKit-40	Y-ConCover-40	Y-ConPlug-11	4 (Ethernet)	0
Y-ConKit-41	Y-ConCover-40	Y-ConPlug-21	4 (Ethernet)	2

IP67 / 68 / 69K Metal Field Kits (EMI)

Y-ConCover-40-E

Y-ConPlug-**

Description:

IP67/68/69K EMI RJ45 Field kit for self-assembly (metal)

IP67/68/69K EMV RJ45 Konfektionierungs-Kit zur Selbstmontage (Metallversion)

Part Number (Details)

Y-ConKit - 4*

Series

See table below

Part Number	Cover	Plug	Signal Contacts	Power Contacts
Y-ConKit-40-E	Y-ConCover-40-E	Y-ConPlug-11	4 (Ethernet)	0
Y-ConKit-41-E	Y-ConCover-40-E	Y-ConPlug-21	4 (Ethernet)	2

IP20 Field Kits

Y-ConAS-11

Y-ConPlug-**

Description:

IP20 RJ45 Field kit for self-assembly

IP20 RJ45 Konfektionierungs-Kit zur Selbstmontage

Part Number (Details)

Y-ConKit - 1*

Series

See table below

Part Number	Strain Relief	Plug	Signal Contacts	Power Contacts
Y-ConKit-10	Y-ConAS-11	Y-ConPlug-11	4 (Ethernet)	0
Y-ConKit-11	Y-ConAS-11	Y-ConPlug-21	4 (Ethernet)	2
Y-ConKit-12	Y-ConAS-11	Y-ConPlug-51	8	2
Y-ConKit-13	Y-ConAS-11	Y-ConPlug-31	6	2
Y-ConKit-14	Y-ConAS-11	Y-ConPlug-41	8	0

IP20 Field Kits (EMI)

Y-ConAS-12

Y-ConCover20

Y-ConPlug-**

Description:

IP20 EMI RJ45 Field kit for self-assembly (Metal)

IP20 EMI RJ45 Konfektionierungs-Kit zur Selbstmontage (Metallversion)

Part Number (Details)

Y-ConKit - 1*

Series

See table below

Part Number	Protection Cap	Cover Type	Plug Type	Signal Contacts	Power Contacts
Y-ConKit-15	Y-ConAS-12	Y-ConCover-20	Y-ConPlug-21	4 (Ethernet)	2
Y-ConKit-16	Y-ConAS-12	Y-ConCover-20	Y-ConPlug-51	8	2
Y-ConKit-17	Y-ConAS-12	Y-ConCover-20	Y-ConPlug-11	4 (Ethernet)	0

TECHNISCHE ÄNDERUNGEN VORBEHALTEN – MASSE IN MILLIMETER

Part Number (Details)

Y-ConOutlet - **

Series

Design Number
(see table below)

Part Number	Cable Outlet Diameter Size
Y-ConOutlet-10	5.0 to 9.0mm
Y-ConOutlet-11	6.0 to 13.0mm

Description:

IP67 industrial outlets for structured cabling, including Y-ConFlange-10-* and cable fixing

IP67-geschützte Anschlussdosen *für strukturierte Verkabelung, mit montiertem Y-ConFlange-10-* und Kabelverschraubung*

Material:

Housing — Aluminium
Gehäuse

Flange — PBT, UL94V-0
Flansch

Cable gland — Nylon 6, UL94V-0
Kabelverschraubung

Specifications:

Operating Temp.: -20°C ~ +80°C
Betriebstemp.

Y-ConOutlet-10

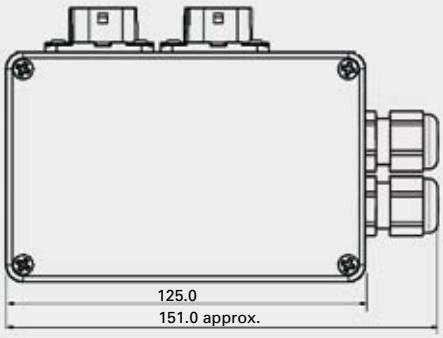

Y-ConOutlet-11

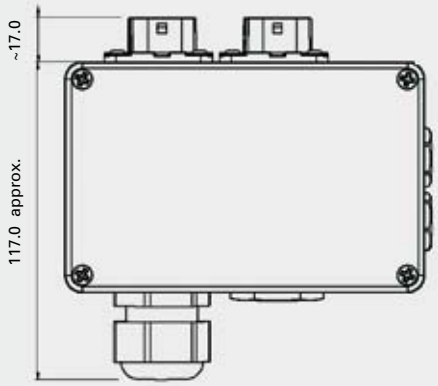

Part Number (Details)

Y-ConTerminal -10

Series

Design Number

Wiring Diagram

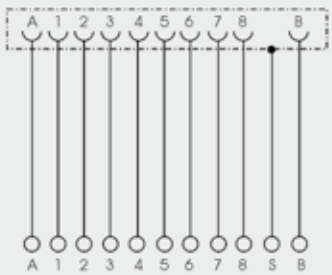

Cat 5 rail mounted terminal box for cabinet wiring, RJ45 / cage clamp incl. Y-ConJack-22 (with power contacts)

Cat 5 Hutschienen-Kabelverteiler *für die Schaltschrankverdrahtung. RJ45 / Klemmanschluss inkl. Y-ConJack-22 (mit 2 Kontakten für die Stromversorgung)*

Specifications:

Operating Temp.: -20°C ~ +80°C
Betriebstemp.

Durability: 1,000 mechanical cycles
Lebensdauer

Current Rating: 2.1A @ 70°C
Bemessungsstrom (power contacts)

SPECIFICATIONS ARE FOR REFERENCE ONLY AND SUBJECT TO ALTERATION WITHOUT PRIOR NOTICE – DIMENSIONS IN MILLIMETER

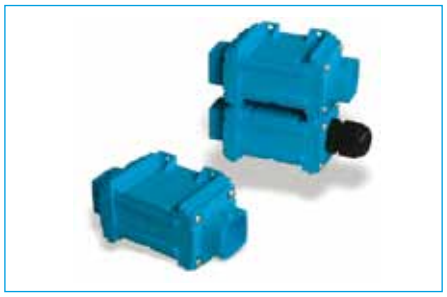

Part Number (Details)

Y-ConCoupler - ** *

Series

Design Number
(see table below)

No Mark = Blue B = Blac

Part Number	No. of Y-ConFlange-10*	Colour
Y-ConCoupler-10	2	Blue
Y-ConCoupler-10-B	2	Black
Y-ConCoupler-11	1 (plus cable gland ∅5.0 -9.0mm)	Blue
Y-ConCoupler-11-B	1 (plus cable gland ∅5.0 -9.0mm)	Black

Description:

IP67 coupler module (w/o electronics) screw mount, guide rails for modular assembly

IP67 Kupplungsmodule *(ohne Elektronik) mit Schraubhalterung und Führungsschienen für modularen Aufbau*

Material: PBT, UL94V-0

Specifications:

Operating Temp.: -30°C ~ +120°C
Betriebstemp.

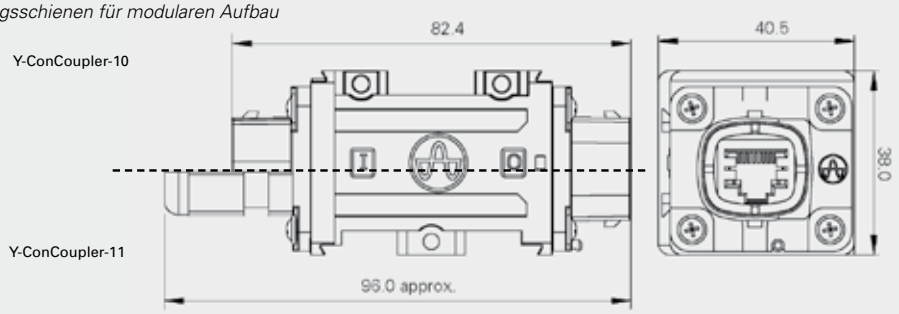

Part Number (Details)

Y-ConSwitch-1U7P

Series

Design Number

Description:

IP67 Ethernet switch*,10BaseT / 100BaseTX, 7 data and 1 power port, unmanaged, Store/Forward, non-blocking, full or half duplex, auto-negotiated data control, screw mounted

IP67 Ethernet-Schalter*,*10BaseT/100BaseTX, 7 Datenports, 1 Stromversorgungsbuchse, unmanaged, Store / Forward, non-blocking, Voll- oder Halbduplexbetrieb, Auto-negotiated Data control, Wandbefestigung*

* i.a.w. IEEE 802.3
IEEE 1588

Material:

Housing Aluminium
Gehäuse

Flange PBT, UL94V-0
Flansch

Specifications

Operating Temp.: -40°C ~ +85°C
Betriebstemp.

Electrical specifications (on request)

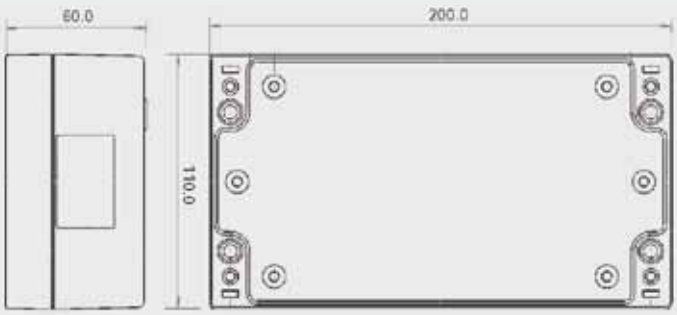

TECHNISCHE ÄNDERUNGEN VORBEHALTEN – MASSE IN MILLIMETER

Industrial Ethernet connected to sensors, actuators and encoders by **Y-Con RJ45 - M8/M12** converter cables.
M8/M12 features:

- Male and female versions 90° and 180°, PUR overmolded
- 360° shield for advanced shield connection
- Metal screw with vibration resistant locking

Industrial Ethernet verbunden mit Sensoren, Aktoren und Encodern über ***Y-Con RJ45 – M8/M12*** *Verbindungskabel.*
M8/M12 Merkmale:

- *Stecker und Buchsen in 90° und 180° Versionen, PUR Umspritzung*
- *360° Schirmanbindung für optimale Schirmeigenschaften*
- *Metallischer Drehverschluss mit vibrationssicherem Mechanismus*

Table of available versions for M8 / M12 products

Connector Type	Cable Mount	Panel Mount	Male	Female	90°	180°	Coding	Pin Count	Shielded
M8	O		O			O		3, 4	O
M8	O			O		O		3, 4	O
M8	O		O		O			3, 4	O
M8	O			O	O			3, 4	O
M12	O		O			O	A	3, 4, 5, 8	O
M12	O			O		O	A	3, 4, 5, 8	O
M12	O		O		O		A	3, 4, 5, 8	O
M12	O			O	O		A	3, 4, 5, 8	O
M12	O		O			O	B, D	3, 4, 5	O
M12	O			O		O	B, D	3, 4, 5	O
M12	O		O		O		B, D	3, 4, 5	O
M12	O			O	O		B, D	3, 4, 5	O

Connector Type	Cable Mount	Panel Mount	Male	Female	90°	180°	Coding	Pin Count	Shielded
M12		O	O			O	A	3, 4, 5, 8	O
M12		O		O		O	A	3, 4, 5, 8	O
M12		O	O		O		A	3, 4, 5, 8	O
M12		O		O	O		A	3, 4, 5, 8	O
M12		O	O			O	B, D	3, 4, 5	O
M12		O		O		O	B, D	3, 4, 5	O
M12		O	O		O		B, D	3, 4, 5	O
M12		O		O	O		B, D	3, 4, 5	O

Max. cable diameter 8.50 / max. wire thickness 0.54mm²

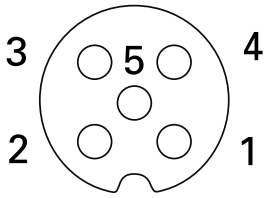

A-Coding
(IEC 60947-2)
Female

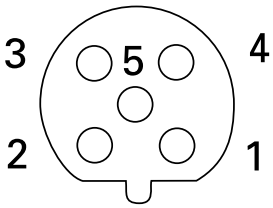

B-Coding
(INTERBUS and PROFIBUS)
Female

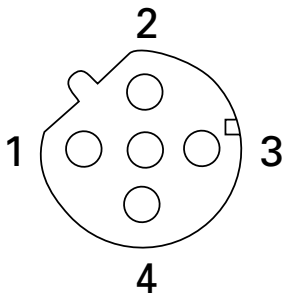

D-Coding
(4 pin Ethernet)
Female

SPECIFICATIONS ARE FOR REFERENCE ONLY AND SUBJECT TO ALTERATION WITHOUT PRIOR NOTICE – DIMENSIONS IN MILLIMETER

Part Number Example for RJ45 with M8 and M12

Y-ConC	-	R40	6P	-	MA	4D	-	2000	-	A
Series		RJ45 with 4+0 contacts	IP67 plastic cover		M8 male shielded 180°	4 pins Code D		Cable length in mm		Wiring T568A 1:1

Part Number (Details)

Y-ConC - *** ** - ** * * - **** - *

Series

Interface Side 1

R40 = RJ45, 4+0 contacts
R42 = RJ45, 4+2 contacts
R60 = RJ45, 6+0 contacts
R62 = RJ45, 6+2 contacts
R80 = RJ45, 8+0 contacts
R82 = RJ45, 8+2 contacts

Protection side 1

6P = IP67 plastic cover
6M = IP67 metal cover
2S = IP20 strain relief
2L = IP20Lock strain relief
2U = IP20Lock 90° moulded
2M = IP20 metal Cover-20
CU = Customer specific

Interface side 2

MA = M8 male shielded 180°
MB = M8 female shielded 180°
MC = M8 male shielded 90°
MD = M8 female shielded 90°
ME = M12 male shielded 180°
MF = M12 female shielded 180°
MG = M12 male shielded 90°
MH = M12 female shielded 90°

Pin counts 3, 4, 5 and 8

Coding A, B and D

Length in mm

Wiring Plan A = T568A 1:1, B = T568A crossover, C = T568B 1 :1, D = T568B crossover, F = Custom

TECHNISCHE ÄNDERUNGEN VORBEHALTEN – MASSE IN MILLIMETER

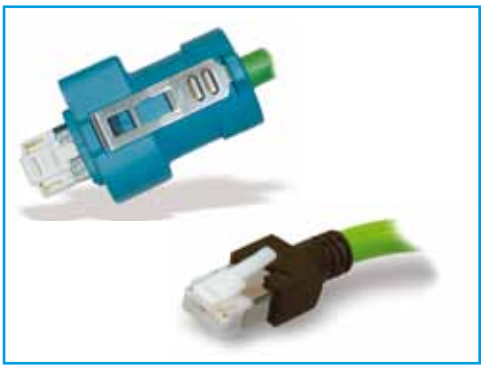

Building on the success of ProfiBus, the ProfiNet transmission standard is set to become one of the most important for industrial automation applications. The Y-Con ProfiNet connector employs piercing contacts, and the plug mating face conforms to the RJ45 standard. It can thereby be used with standard RJ45 jacks and is backwards compatible.

Aufbauend auf dem Erfolg von ProfiBus ist der ProfiNet Übertragungs-standard dabei, einer der wichtigsten Verkabelungsstandards für Anwendungen der industriellen Automation zu werden. Der Y-Con ProfiNet Stecker verwendet Piercing-Kontakte. Das Steckgesicht ist identisch mit dem RJ45-Steckertyp. Somit ist er auch mit Standard RJ45-Buchsen anwendbar und abwärts kompatibel.

Part Number Y-ConPlug-15

Description:

RJ45 Cat 5 plug for use in ProfiNet applications, with cable guide, shielding and cable crimp. 4 data contacts. Suitable for AWG22 cable with a lead ≤ ∅1.40mm

***RJ45 Cat 5 Kabelstecker für ProfiNet**-Anwendungen mit Kabelführung, Schirmung und Kabelcrimp. 4 Datenkontakte. Passend zu AWG22-Kabel mit Einzelader ≤ ∅1,40mm*

Material:

Plug *Steckergehäuse*	PBT, UL94V-0
Shield: *Schirm*	Nickel plated brass
Contact Area: *Kontakt*	30µ" Au over Ni

Specifications:

Operating Temp.: *Betriebstemp.*	-40°C ~ +120°C
Durability: *Lebensdauer*	1,500 mechanical cycles

Part Number Y-ConCable-7

Description:

100 Mbit, Cat 5e ES, digital signal cable for use with Y-ConPlug-15 in ProfiNet applications, with 4 data lines,

***100 Mbps, Cat 5e ES,** Kabel für digitale Signale, für den Einsatz mit Y-Con-Plug15 bei ProfiNet-Anwendung mit 4 Datenleitungen,*

Material:

Jacket: *Mantel*	PUR
Bending Radius: *Biegeradius*	49mm multiple turns 21mm single turn
Operating Temp.: *Betriebstemp.*	-20°C ~ +80°C
Colour: *Farbe*	Green

For more Y-ConCable-7 specifications see page 24

SPECIFICATIONS ARE FOR REFERENCE ONLY AND SUBJECT TO ALTERATION WITHOUT PRIOR NOTICE – DIMENSIONS IN MILLIMETER

Part Number (Details)

Y-ConUSB-Stick - 3

Series

3 = 2MB

Part Number	Memory Size
*Y-ConUSB-Stick-3	2GB

Description:

IP67/68/69K, USB stick with 2GB of flash memory.
For use with Y-ConFlange-**-*

IP67/68/69K USB-Stick mit 2GB Flash-Speicher.
*Für den Einsatz mit Y-ConFlange-**-**

Outline Dimensions

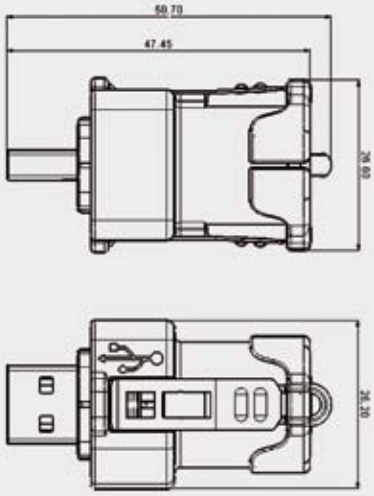

Material:

Body *Gehäuse*	PBT, UL94V-0
Seal *Dichtung*	FKM (Viton®)
Moulding *Vergussmasse*	Macromelt, halogen free
Fixing clips *Rasthaken*	Stainless Steel
Colour: *Farbe*	Blue

Specifications:

Operating Temp.: -25°C ~ +80°C
Betriebstemp.

* For minimum order quantity please contact Yamaichi

TECHNISCHE ÄNDERUNGEN VORBEHALTEN – MASSE IN MILLIMETER

Part Number (Details)

Y-ConFlange - 10 - *

Series

Design Number

No Mark = Blue B = Black

Part Number	Colour
Y-ConFlange-10	Blue
Y-ConFlange-10-B	Black

Description:

Universal **mounting flange** with an integrated 2C seal (also in the screw area) to ensure IP6* protection when mounted with Y-ConCover-10-*

*Universeller **Gehäuseflansch** mit integrierter 2K-Dichtung (auch im Schraubbereich). Damit sind für Y-ConCover-10-* im montierten Zustand die Schutzarten IP6* gewährleistet*

Material:

Flange Body PBT, UL94V-0
Flanschgehäuse

Flange Seal TPE, UL94 HB
Flanschdichtung

Specifications:

Operating Temp.: -40°C ~ +120°C
Betriebstemp.

Outline Dimensions

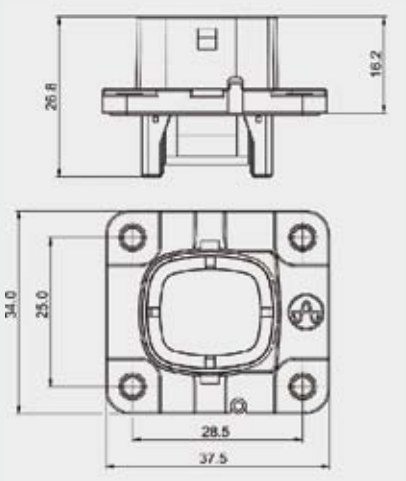

Part Number (Details)

Y-ConUSB-Adapter - **

Series

Design Number
(see table below)

Part Number	Adapter Use
Y-ConUSB-Adapter-10	for all USB-A modules
Y-ConUSB-Adapter-20	for all USB-B modules

Description:

Y-ConFlange adapter modules for use with Y-ConUSB-PCB-**Jacks

***Y-ConFlange Adaptergehäuse** für die Y-ConUSB-PCB-** Buchsen*

Material: PBT, black

Specifications:

Operating Temp.: -40°C ~ +120°C
Betriebstemp.

SPECIFICATIONS ARE FOR REFERENCE ONLY AND SUBJECT TO ALTERATION WITHOUT PRIOR NOTICE – DIMENSIONS IN MILLIMETER

Part Number Y-ConUSB-PCB-11

USB-A Hi-Speed PCB mounted jack with PCB terminals[1)],
including shield connection and fixing for cable straps.
For use with Y-ConUSB-Adapter-10 and Y-ConFlange-10-*

USB-A Hi-Speed Buchse auf PCB mit Leiterplattenklemme[1)] *inkl. Schirmanschluss und Bohrung für Kabelbinder.*
*Für den Einsatz mit Y-ConUSB-Adapter-10 und Y-ConFlange-10-**

Operating Temp.: -25°C ~ +80°C
Betriebstemp.

[1)] cable according to Y-Con recommendation - on request
Kabellänge gemäß Y-Con Empfehlung - auf Anfrage

Part Number Y-ConUSB-PCB-12

USB-A / USB-A Hi-Speed PCB mounted coupler jack,
for use with Y-ConUSB-Adapter-10 and Y-ConFlange-10-*

USB-A / USB-A Hi-Speed Buchse auf PCB. *Für den Einsatz mit Y-ConUSB-Adapter-10 und Y-ConFlange-10-**

Operating Temp.: -25°C ~ +80°C
Betriebstemp.

Part Number Y-ConUSB-PCB-21

USB-B Hi-Speed PCB mounted jack with PCB terminals[1)],
including shield connection and fixing for cable straps.
For use with Y-ConUSB-Adapter-20 and Y-ConFlange-10-*

USB-B Hi-Speed Buchse auf PCB mit Leiterplattenklemme[1)] *inkl. Schirmanschluss und Bohrung für Kabelbinder.*
*Für den Einsatz mit Y-ConUSB-Adapter-20 und Y-ConFlange-10-**

Operating Temp.: -25°C ~ +80°C
Betriebstemp.

[1)] cable according to Y-Con recommendation - on request
Kabellänge gemäß Y-Con Empfehlung - auf Anfrage

Part Number Y-ConUSB-PCB-22

USB-B / USB-A Hi-Speed PCB mounted coupler jack,
for use with Y-ConUSB-Adapter-20 and Y-ConFlange-10-*

USB-B / USB-A Hi-Speed Buchse auf PCB. *Für den Einsatz mit Y-ConUSB-Adapter-20 und Y-ConFlange-10-**

Operating Temp.: -25°C ~ +80°C
Betriebstemp.

Part Number Y-ConUSB-PCB-32

USB-B / USB-B Hi-Speed PCB mounted coupler jack,
for use with Y-ConUSB-Adapter-20 and Y-ConFlange-10-*

USB-B / USB-B Hi-Speed Buchse auf PCB. *Für den Einsatz mit Y-ConUSB-Adapter-20 und Y-ConFlange-10-**

Operating Temp.: -25°C ~ +80°C
Betriebstemp.

TECHNISCHE ÄNDERUNGEN VORBEHALTEN – MASSE IN MILLIMETER

Description:

Y-Con USB-A, IP67 / 68 / 69K and IP20
cable assembly in various configurations

Y-Con USB-A, *IP67 / 68 / 69K und IP20 Kabelkonfektion in verschiedenen Konfigurationen*

Material:

Cable Jacket: PUR, black
Mantel

Specifications:

Operating Temp.: -25°C ~ +80°C
Betriebstemp.

Other cable lengths and raw cable specifications on request
Andere Kabellängen und Kabelspezifikation auf Anfrage erhältlich

Wiring Information (standard)

USB-A

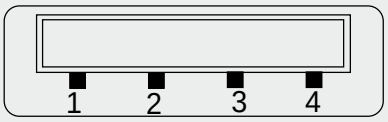

Pin No.	Name	Color	Notes
1	VBUS	Red	Power
2	D-	White	Data - (Twisted pair)
3	D+	Green	Data + (Twisted pair)
4	GND	Black	Ground

USB-B

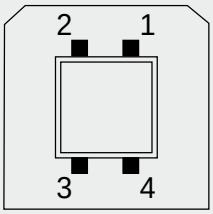

Pin No.	Name	Color	Notes
1	VBUS	Red	Power
2	D-	White	Data -
3	D+	Green	Data + (Twisted pair)
4	GND	Black	Ground

Description:

Y-Con USB-B, IP67 / 68 / 69K and IP20
cable assembly in various configurations

Y-Con USB-B, *IP67 / 68 / 69K und IP20 Kabelkonfektion in verschiedenen Konfigurationen*

Material:

Cable Jacket: PUR, black
Mantel

Specifications:

Operating Temp.: -25°C ~ +80°C
Betriebstemp.

Other cable lengths and raw cable specifications on request
Andere Kabellängen und Kabelspezifikation auf Anfrage erhältlich

SPECIFICATIONS ARE FOR REFERENCE ONLY AND SUBJECT TO ALTERATION WITHOUT PRIOR NOTICE – DIMENSIONS IN MILLIMETER

Part Number Example for USB Cable Assemblies

Y-ConC	-	UA4	6P	-	UB	2S	-	2000	-	E
Series		USB A with 4 contacts	IP67 plastic cover		USB B with 4 Contacts	IP20 with strain relief		Length in mm		Standard

Part Number (Details)

Y-ConC - *** ** - ** ** - **** - *

Series

Interface Side 1

UA4 = USB A, 4 contacts
UB4 = USB B, 4 contacts

Protection Side 1

6P = IP67 plastic cover

2S = IP20 strain relief

2F = IP20 flat

2L = IP20Lock strain relief

Interface Side 2

UA4 = USB A, 4 contacts
UB4 = USB B, 4 contacts
CU = customer specific
FE = free end (cut only)

Protection Side 2

6P = IP67 plastic cover

2S = IP20 strain relief

2F = IP20 flat

2L = IP20Lock strain relief

CU = customer specific

Length in mm

Wiring Plan E = Standard USB F = Custom

TECHNISCHE ÄNDERUNGEN VORBEHALTEN – MASSE IN MILLIMETER

Part Number (Details)

Y-ConC - IE6 ** - ** ** - **** - E

- **Series**: Y-ConC
- **Interface side 1**: IE6 = IEEE, 6 contacts
- **Protection side 1**: 6P = IP67 plastic cover; 2S = IP20 strain relief
- **Interface side 2**: IE = IEEE; CU = customer specific; FE = free end (cut only)
- **Protection side 2**: 6P = IP67 plastic cover; 2S = IP20 strain relief; CU = customer specific
- **Length in mm**
- **Wiring Plan**: E = Standard IEEE; F = Custom

Description:

IEEE1394b (800 Mbit/s) cable assembly
Standard length = 2.0 meters.

IEEE1394b (800 Mbit/s) Kabelkonfektionen
Standardlänge = 2.0 Meter.

Other cable lengths and cable specifications available on request
Andere Kabellängen und Kabelspezifikation auf Anfrage erhältlich

Material:

Jacket: PUR, black
Mantel

Specifications:

Operating Temp.: -10°C ~ +70°C
Betriebstemp.

SPECIFICATIONS ARE FOR REFERENCE ONLY AND SUBJECT TO ALTERATION WITHOUT PRIOR NOTICE – DIMENSIONS IN MILLIMETER

Part Number (Details)

Y-ConFlange - 10 *

Series

Design Number

No Mark = Blue B = Black

Part Number	Colour
Y-ConFlange-10	Blue
Y-ConFlange-10-B	Black

Description:

Universal **mounting flange** with an integrated 2C seal (also in the screw area) to ensure IP6* protection when mounted with Y-ConCover-10-*

(see page 6 for more details)

*Universeller **Gehäuseflansch** mit integrierter 2K-Dichtung (auch im Schraubbereich), damit sind für Y-ConCover-10-* im montierten Zustand die Schutzarten IP6* gewährleistet*

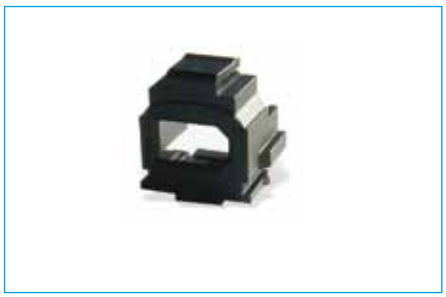

Part Number (Details)

Y-ConIEEE - Adapter - 10

Series

Design Number

Description:

Y-ConIEEE adapter module for use with Y-ConFlange-10-* and Y-ConIEEE-PCB-11

***Y-ConIEEE Adaptergehäuse** für den Einsatz mit Y-ConFlange-10-* und Y-ConIEEE-PCB-11*

Material:

PBT, black UL94V-0

Specifications:

Operating Temp.: -40°C ~ +120°C

Betriebstemp.

Part Number (Details)

Y-ConIEEE - PCB-11

Series

Design Number

Description:

IEEE1394b PCB mounted jack with PCB terminals, incl. shield connection and fixing for cable straps.
For use with Y-ConIEEE-Adapter-10 and Y-ConFlange-10-*

***IEEE1394b Buchse auf PCB mit Leiterplattenklemme** inkl. Schirmanschluss und Bohrung für Kabelbinder.*
*Für den Einsatz mit Y-ConIEEE-Adapter-10 und Y-ConFlange-10-**

Specifications:

Operating Temp.: -10°C ~ +70°C

Betriebstemp.

For futher details please contact Yamaichi

TECHNISCHE ÄNDERUNGEN VORBEHALTEN – MASSE IN MILLIMETER

Test	Requirement	Standards
Vibration	10-500Hz, 50g, no contact interrupt >30ns	DIN IEC 60068-2-6
Shock	1 mio. shocks at 50g	–
Mating / Unmating Force IP20	< 20N	DIN EN 60603-7
Effectiveness of lock	50N for 60sec	DIN EN 60603-7
Rapid change of temperature	-40 ~ +85°C for 100 cycles	DIN IEC 60068-2-14
Dry heat	80°C + 120°C for 1,000 hrs	DIN IEC 60068-2-2
Damp heat	40°C, 93% humidity for 56 days	DIN IEC 60068-2-78
Industrial atmosphere	4 gases for 10 days	DIN IEC 60068-2-60 (method 4)
Electrical load	1.5A for 1,000 hrs	DIN IEC 60512-5
Current rating	2.1A at 70°C	DIN IEC 60512-5-2
Strain relief	80N static + 30N dynamic	DIN 57472-625
Drag Chain	min. 100,000 up to max. 1 mio. cycles	–
Ultraviolet radiation	40°C, 16 hrs at 700W + 16 hrs at 0W	DIN IEC 60068-2-9
Salt spray	48 hrs	DIN IEC 60068-2-11
Dust test	20mbar for 8 hrs	DIN EN60068-2-68
IP67	0.1 bar (= 1.0m depth) for 30 minutes	DIN 40050-9
IP68	0.1 bar (= 1.0m depth) for 48 hrs	DIN 40050-9
IP69K	High pressure water jet (80 bar) from 4 positions x 30 seconds 80°C water temperature	DIN 40050-9

Results only apply to specific products. Not all tests were carried out on all products. Details on request.

SPECIFICATIONS ARE FOR REFERENCE ONLY AND SUBJECT TO ALTERATION WITHOUT PRIOR NOTICE – DIMENSIONS IN MILLIMETER

Y-ConAS-11 ..... 8, 27
Y-ConAS-12 ..... 8, 10, 27
Y-ConAS-13 14
Y-ConAS-21 ..... 2, 3, 4, 5
Y-ConAS-23 26
Y-ConAS-23-B 26
Y-ConAS-24 ..... 6, 26
Y-ConAS-24-LT 6
Y-ConAS-25 ..... 6, 7
Y-ConCable-1 24
Y-ConCable-2 24
Y-ConCable-3 24
Y-ConCable-4 24
Y-ConCable-7 ..... 24, 32
Y-ConCable-8 24
Y-ConCable-10 24
Y-ConCoupler-10 29
Y-ConCoupler-10-B 29
Y-ConCoupler-11 29
Y-ConCoupler-11-B 29
Y-ConCover-10 ..... 2, 26
Y-ConCover-10-B 2, 26
Y-ConCover-10-B-E 3, 26
Y-ConCover-10-B-LT 2, 26
Y-ConCover-10-B-LT-E 3
Y-ConCover-10-E 3, 26
Y-ConCover-10-LT 2
Y-ConCover-10-LT-E 3
Y-ConCover-20 ..... 10, 27
Y-ConCover-30 ..... 2, 3
Y-ConCover-40 ..... 4, 27
Y-ConCover-40-B-E 27
Y-ConCover-40-E 5, 27
Y-ConCover-40-LT-E 5
Y-ConCover-40-LT 4
Y-ConC Assemblies for IEEE 38
Y-ConC Assemblies for IP20Lock 11
Y-ConC Assemblies for RJ45 12
Y-ConC Assemblies for USB 31, 37
Y-ConFlange-10 ..... 6, 26, 34, 39
Y-ConFlange-10-B 6, 26, 34, 39
Y-ConFlange-40 7
Y-ConFlange-40-C 7
Y-ConFlange-Punch-1 ..... 6, 7
Y-ConIEEE-Adapter-10 39
Y-ConIEEE-PCB-11 39
Y-ConIP20HFR-10 9
Y-ConIP20HFR-20 9
Y-ConIP20HFR-40 9
Y-ConIP20Lock-10 9
Y-ConIP20Lock-20 9
Y-ConIP20Lock-Clip-1 11
Y-ConIP20Lock-Clip-2 11
Y-ConIP20Lock-Clip-3 11
Y-ConIP20Lock-Clip-4 11
Y-ConIP20Lock-Clip-5 11
Y-ConIP20Lock-Clip-6 11
Y-ConIP20Lock-Clip-7 11
Y-ConJack-11 14
Y-ConJack-11-3C-1 18
Y-ConJack-11-3C-2 18
Y-ConJack-11-3C-3 18
Y-ConJack-11-3C-4 18
Y-ConJack-11-3C-5 18
Y-ConJack-11-3C-6 18
Y-ConJack-11-3C-7 18
Y-ConJack-12 14
Y-ConJack-13 20
Y-ConJack-14 20
Y-ConJack-15 21
Y-ConJack-16 19
Y-ConJack-16K 19
Y-ConJack-16KM 19
Y-ConJack-16M 19
Y-ConJack-21 14
Y-ConJack-21-3C-1 18
Y-ConJack-21-3C-2 18
Y-ConJack-21-3C-3 18
Y-ConJack-21-3C-4 18
Y-ConJack-21-3C-5 18
Y-ConJack-21-3C-6 18
Y-ConJack-21-3C-7 18
Y-ConJack-21-PP 14
Y-ConJack-22-THR 14
Y-ConJack-22-WAVE 14
Y-ConJack-23 20
Y-ConJack-24 20
Y-ConJack-25 21
Y-ConJack-25C 22
Y-ConJack-26C 22
Y-ConJack-31 16
Y-ConJack-32 16
Y-ConJack-33 16
Y-ConJack-34 16
Y-ConJack-35 16
Y-ConJack-36 16
Y-ConJack-51 17
Y-ConJack-52 17
Y-ConJack-53 17
Y-ConJack-54 17
Y-ConJack-55 17
Y-ConJack-56 17
Y-ConKit-10 27
Y-ConKit-11 27
Y-ConKit-12 27
Y-ConKit-13 27
Y-ConKit-14 27
Y-ConKit-15 27
Y-ConKit-16 27
Y-ConKit-17 27
Y-ConKit-20 26
Y-ConKit-20-B 26
Y-ConKit-21 26
Y-ConKit-21-B 26
Y-ConKit-21-B-E 26
Y-ConKit-21-B-LT 26
Y-ConKit-21-E 26
Y-ConKit-23 26
Y-ConKit-24 26
Y-ConKit-24-B 26
Y-ConKit-24-B-LT 26
Y-ConKit-26 26
Y-ConKit-30 26
Y-ConKit-30-B 26
Y-ConKit-40 27
Y-ConKit-40-E 27
Y-ConKit-41 27
Y-ConKit-41-E 27
Y-ConOutlet-10 28
Y-ConOutlet-11 28
Y-ConPlug-11 ..... 8, 26, 27
Y-ConPlug-15 32
Y-ConPlug-21 ..... 8, 26, 27
Y-ConPlug-31 ..... 8, 26, 27
Y-ConPlug-41 ..... 8, 26, 27
Y-ConPlug-51 ..... 8, 26, 27
Y-ConSwitch-1U7P 29
Y-ConTerminal-10 28
Y-ConTool-11 23
Y-ConTool-20 23
Y-ConTool-30 23
Y-ConUSB-Adapter-10 34
Y-ConUSB-Adapter-20 34
Y-ConUSB-PCB-11 35
Y-ConUSB-PCB-12 35
Y-ConUSB-PCB-21 3
Y-ConUSB-PCB-22 35
Y-ConUSB-PCB-32 35
Y-ConUSB-Stick-3 33

TECHNISCHE ÄNDERUNGEN VORBEHALTEN – MASSE IN MILLIMETER