Tubular Vitreous Enamelled Wirewound Resistors

TT electronics
Welwyn Components

1600/1900 Series

- **Impervious lead free vitreous enamel coating**
- **Can be supplied with fixed, adjustable, tapped or low inductance winding**
- **Seven termination styles with choice of mounting arrangements**
- **Manufactured RoHS compliant Pb-free terminations***

* Check status of stock when ordering

General Information

Vitreous enamelled wirewound resistors are capable of withstanding a higher dissipation size for size, than any other protected type; this is attributable to the higher operating temperature which the wire and enamel can withstand. Vitreous enamel provides exceptionally good protection to the wire element and is essentially impervious to moisture. The resistors can safely be used in harsh environmental conditions.

The Welwyn range is based on thirteen sizes of tube, each of which has a recommended maximum dissipation which limits operating surface temperature to a maximum of 375°C.

The stability and high reliability of Welwyn tubular vitreous resistors is a direct result of the best quality materials being used in their construction.

High purity ceramic tubes have been matched with nickel chromium resistance wires and specially formulated enamel to ensure that the resistors can withstand repeated heat cycling without damage.

Connections between the resistance element and end terminations are welded; other connections are brazed.

Mounting devices are available which permit resistors to be mounted by both ends or by one end. Single ended mounting is recommended for applications which do not subject the resistor to shock or vibration.

Ferrules and the F type mounting plug are anchored into the tubes with high temperature adhesive.

Special requirements, for types or styles not described in this brochure, will be considered for economic quantities.

Electrical Data

		1601	1905	1600	1602	1906	1603	1604
Power rating at 70°C	watts	11	16	16.5	17	22	25	35
Resistance range	ohms	See Table 1						
Limiting element voltage	volts	See Table 1						
TCR (-55 to +200°C)	ppm/°C	Typically: <+75 Maximum + 200						
Resistance tolerance	%	1, 2, 5, 10 See table 1 for value restrictions						
Values		E24 preferred						
Thermal impedance	°C/watt	See fig. 1						
Operating temperature range	°C	-55 to +375						

		1605	1908	1607	1606	1608	1609
Power rating at 70°C	watts	47	54	76	91	115	165
Resistance range	ohms	See Table 1					
Limiting element voltage	volts	See Table 1					
TCR (-55 to +200°C)	ppm/°C	Typically: <+75 Maximum + 150					
Resistance tolerance	%	1, 2, 5, 10 See table 1 for value restrictions					
Values		E24 preferred					
Thermal impedance	°C/watt	See fig. 1					
Operating temperature range	°C	-55 to +375					

Note See Figure 1 for curves of temperature rise / watts dissipation.

General Note
Welwyn Components reserves the right to make changes in product specification without notice or liability.
All information is subject to Welwyn's own data, relates to current manufacture and is considered accurate at time of going to print.

Welwyn
A subsidiary of TT electronics plc

© Welwyn Components Limited · Bedlington, Northumberland NE22 7AA, UK
Telephone: +44 (0) 1670 822181 · Facsimile: +44 (0) 1670 829465 · Email: info@welwyn-tt.com · Website: www.welwyn-tt.com

Issue E · 10.05

Electrical Data (continued)

Table 1

Type	*Dissipation (watts) to produce operating hotspot temperature (°C) of: Ambient = 20°C			Ambient = 70°C	Resistance range (ohms) Minimum resistance at			Max. at any tolerance	Limiting element voltage Termination style		Low inductance winding resistance range (ohms) Min. res. at		Max. at either tolerance
	200	300	375	375	±5%	±2%	±1%		C	All others	±10%	±5%	
1601	5	10	14	11	1	15	25	15k	250	150	10	50	1.3k
1905	7	14.5	20	16	1	15	30	30k	-	450	10	50	3.5k
1600	7.5	15	21	16.5	1	15	30	56k	-	600	10	50	5.0k
1602	8	15.5	22	17	1	20	25	43k	500	350	10	50	4.0k
1906	9.5	19	28	22	1	20	30	50k	700	550	10	50	5.5k
1603	11	22	32	25	1	20	30	83k	850	750	10	50	7.5k
1604	15.5	31	45	35	1	20	60	100k	1300	1000	15	50	11.5k
1605	21	41	59	47	1	30	40	100k	1100	900	15	50	14k
1908	24	47	68	54	1	30	40	100k	1200	1000	10	50	16k
1607	34	66	95	76	1	30	50	100k	1300	900	15	50	22k
1606	41	80	115	91	1	30	40	160k	2100	1900	15	50	32k
1608	52	101	145	115	1	30	50	180k	2100	1800	20	50	38k
1609	74	145	208	165	1	35	50	250k	3000	2500	30	100	58k

*The stated dissipation applies to resistors mounted horizontally with unobstructed bore.

Performance Data

		Max	Typ
Load : 1000 hours at 70°C	ΔR%	5.0	3.5
Shelf life : 12 months at room temperature	ΔR%	1.0	0.1
Climatic	ΔR%	0.5	0.35
Long term damp heat	ΔR%	0.2	0.05
Bump and vibration	ΔR%	0.1	0.02
Noise (in a decade of frequency)	ΔR%	zero	zero
Pulse Handling Data		Available by request	

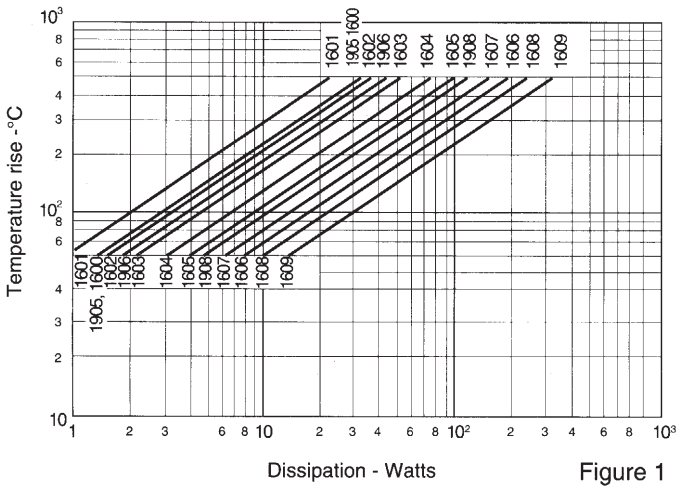

Figure 1

TT electronics
Welwyn Components

Physical Data

Table 2 Dimensions in millimetres. See fig 2-8 for styles

Type	A max	B max	C max	D nom	E max	F max	G nom	H ±.25	J	K max
1601	33.0	17.5	8.2	4.5	5.0	19.5	15	3.0	M3	59
1905	56.1	14.5	6.55	4.5	5.0	17.5	10	3.0	M3	-
1600	61.5	14.5	6.55	4.5	5.0	17.5	10	3.0	M3	-
1602	51.0	17.5	8.2	4.5	5.0	19.5	15	3.0	M3	77
1906	64.3	17.5	8.2	4.5	5.0	19.5	15	3.0	M3	90
1603	74.5	17.5	8.2	4.5	5.0	19.5	15	3.0	M3	101
1604	102	17.5	8.2	4.5	5.0	19.5	15	3.0	M3	128
1605	89.5	24.0	13.2	5.7	6.8	26.5	17	4.0	M4	122
1908	102	24.0	13.2	5.7	6.8	26.5	17	4.0	M4	134
1607	102	32.0	19.2	7.0	9.8	32.0	22	6.4	M6	134
1606	166	24.0	13.2	5.7	6.8	26.5	17	4.0	M4	198
1608	152	32.0	19.2	7.0	9.8	32.0	22	6.4	M6	184
1609	216	32.0	19.2	7.0	9.8	32.0	22	6.4	M6	248

Figure 2 Style B

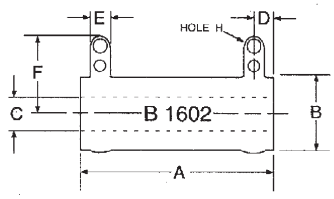

Figure 3 Style AP

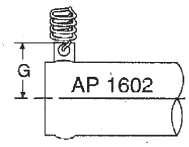

Figure 4 Style AW

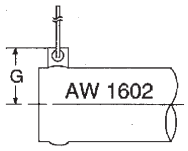

Figure 5 Style 4B

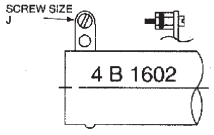

Figure 6 Style CB

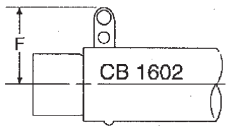

Figure 7 Style C

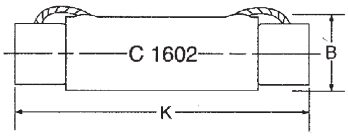

Figure 8 Style CP

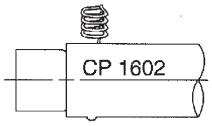

Terminations

Styles B, 4B, AP and AW are available in all 13 tube sizes.

Styles C, CB and CP are available in sizes 1601 to 1609 inclusive, 1906 and 1908

Lugs (Figure 2): Pb free solder coated nickel iron. Denoted by prefix B to size reference, thus B1602

Pigtails (Figure 3): 14/.193 mm copper, 150 mm minimum length. Denoted by prefix AP, thus AP1602

Rigid wires (Figure 4): 1.2 mm diameter tinned copper, 32 mm minimum length.

Denoted by prefix AW, thus: AW1602

Lugs with screws, nuts and washers (Figure 5): Nickel plated brass screws and nuts. Denoted by prefix 4B, thus: 4B1602.

Ferrule, electrically isolated (Figure 6) Connection to resistor via Pb free solder coated nickle iron lugs. Denoted by prefix CB, thus: CB1602.

Ferrule, electrically live (Figure 7) Nickel plated brass. Denoted by prefix C, thus: C1602.

Ferrule, electrically isolated (Figure 8): Connection to resistor via pigtails of 14/.193 mm copper, 150mm minimum length. Denoted by prefix CP thus: CP1602

Marking The resistors are legend marked with type reference, resistance value, tolerance and manufacturing date code. Value marking conforms to IEC 62.

Solvent resistance: The vitreous coating and marking are resistant to all accepted industrial cleaning fluids.

Adjustable Resistors (see Figure 9)

Adjustable resistors use the same basic construction as fixed resistors already described, and have a window in the vitreous enamel through which contact is made to the resistive element by a sliding contact band. The band is fitted with a clamping screw and nut to retain it firmly in position.

The adjustable winding style has a maximum permissible hot spot temperature of 300°C and the maximum dissipation, for an ambient temperature of 20°C, is specified in Table 4. The partial open winding necessitates a reduced maximum resistance, when compared with fixed resistors, and the resistance range is also defined in Table 4.

More than one adjusting band can be fitted, up to the maximum number specified in Table 3.

Adjustable resistors are available in termination styles B, 4B, AP, C, CB and CP, in sizes 1602 to 1609 inclusive and 1906 and 1908 denoted by prefix 'V'.

Table 3

Tube size	A mm max.	B mm max.	Hole C dia. mm	Max. no of adjusting bands
1602				
1603	20	27	3.2	1
1906				
1604				
1605	20	27	3.2	3
1908	25	32	3.7	2
1606	25	32	3.7	4
1607	30	38	3.7	2
1608	30	38	3.7	3
1609	30	38	3.7	5

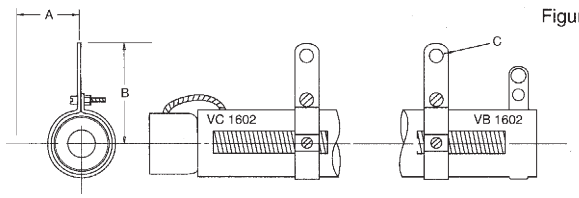

Figure 9

Table 4

Type	Max. dissipation in 20°C ambient (watts)		Resistance range (ohms)		
	200°C hot spot	300°C hot spot	Min. for styles VC, VCP	Min. for all other styles	Max. for all styles
1602	8	15.5	4	3	1.6k
1906	9.5	19	4	3	2.5k
1603	11	22	6	6	3.0k
1604	16	31	8	8	5.3k
1605	21	41	6	6	4.5k
1908	24	47	11	10	7.5k
1607	34	66	11	9	8.1k
1606	41	80	14	13	13.2k
1608	52	101	17	16	15.4k
1609	74	145	25	24	25.5k

Manufactured Values

E24 preferred

Standard Selection Tolerance ±10%

All other details of the electrical and environmental performance of adjustable resistors are the same as for fixed resistors.

© Welwyn Components Limited Bedlington, Northumberland NE22 7AA, UK
Telephone: +44 (0) 1670 822181 · Facsimile: +44 (0) 1670 829465 · Email: info@welwyn-tt.com · Website: www.welwyn-tt.com

Tapped Resistors See Figure 10

Fixed resistors can be supplied with taps to special order. Because of the reduced winding length, the total resistance of a tapped resistor will be less than can be offered on a fixed resistor of the same size. The reduction is proportional to the number of taps and Table 5 is intended as a guide.

The minimum resistance per section on all sizes is 1Ω and the standard selection tolerance for any section is ±10%

Ordering Procedure

Enquiries for tapped resistors must state the following details:

Resistance per section

Maximum dissipation per section

Maximum operating ambient temperature

Maximum permissible dimensions if important

Type of terminations required. (See 'Terminations', page 3)

Resistor style or proposed method of mounting.

Table 5

Type	Maximum* total dissipation in 20°C ambient (watts) with single tap	Maximum* resistance with single tap (ohms)	Maximum* number of taps
1905	14.5	9k	1
1600	15.0	12k	1
1602	15.5	9k	1
1906	19.0	13k	1
1603	22	18k	1
1604	31	29k	2
1605	41	34k	2
1908	47	38k	2
1607	66	53k	2
1606	80	78k	4
1608	101	93k	4
1609	145	140k	4

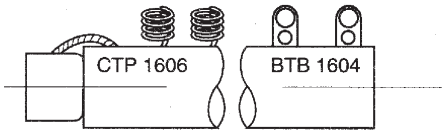

Figure 10

*Maximum total dissipation assumes that this will be evenly spread over the total element length.

Low Inductance Resistors

Ayrton-Perry wound elements are supplied for low inductance applications. This winding style has a maximum permissible hot spot temperature of 300°C. The maximum dissipation is defined in Table 1 under the heading Operating hot spot temperature of 300°C, and resistance ranges are defined in the three right-hand columns of this table.

Application Notes

When cold, vitreous enamel has excellent insulation resistance. In common with all insulants the specific resistance of the enamel decreases with increased temperature; therefore, if operated at any temperature approaching the maximum, the resistor cannot be classed as an insulated type and should not be used in contact with any conducting materials.

The recommended dissipations for each of the resistor hot spot temperatures applies to resistors mounted horizontally. If the bore is completely blocked a 15% derating is recommended. However, wherever possible, resistors should be mounted vertically with unobstructed bore.

This makes best use of the chimney effect of the heated tube and will encourage a cooling stream of air through the bore.

Allowances must be made, when tubular resistors are mounted in banks, for the effects produced by radiation between tubes.

Appreciable reduction of hot spot temperature can be achieved by arranging that resistors are subjected to some measure of forced draught. In general, it is most efficient to extract air from the resistor enclosure and arrange that an air inlet is adjacent to the bottom of the tubes.

If soft soldered connections are used the resistors should be derated where applicable to limit the hot spot temperature to 300°C.

© Welwyn Components Limited Bedlington, Northumberland NE22 7AA, UK
Telephone: +44 (0) 1670 822181 · Facsimile: +44 (0) 1670 829465 · Email: info@welwyn-tt.com · Website: www.welwyn-tt.com

Table 6 mounting clip dimension (mm) See Fig. 11

Clip ref.	Type type	A nom.	B max	C nom.	D max	E max	F max	G ±0.2	H dia	J dia	K nom	Auxiliary locking spring ref
	1601	52	68									
	1602	70	86									
MD1	**1603**	90	106	29	19	17.5	14.5	4.8	4.0	3.9	7.2	MD16
MD4	**1604**	121	137									
	1605	108	128									
	1906	83	99									
	1607	125	146									
MD3	**1608**	176	197	49	33	32.0	19.0	6.4	4.0	6.3	9.5	MD18
MD6	**1609**	240	261									

These mounting clips are suitable for termination styles C, CB and CP. MD4, 5 and 6 have an ear formed in the bottom surface of the bracket to prevent rotation of the mounting plate. The auxiliary locking springs ensure positive retention of the tube under severe mechanical shock conditions. See Figure 11.

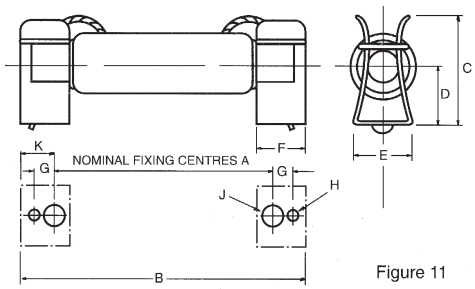

Figure 11

Ordering Procedure

Mounting clips (and auxiliary locking springs when required) should be ordered in units and the type reference specified.

Table 7 Mounting brackets dimensions (mm). See Fig. 12.

Bracket ref.	Type	A nom	B nom	C nom	D nom	E nom
MD40	**1600**	78	92	10	20	4.2
	1905	73	87			
	1601	50	64			
	1602	68	82			
MD41	**1603**	91	105	13	20	4.2
	1604	119	133			
	1906	81	95			
MD42	**1605**	106	120			
	1606	183	197	20	25	5.2
	1908	119	133			
	1607	121	143			
MD43	**1608**	171	193	28	30	5.2
	1609	235	257			

These brackets are suitable for termination styles B, 4B, AP & AW

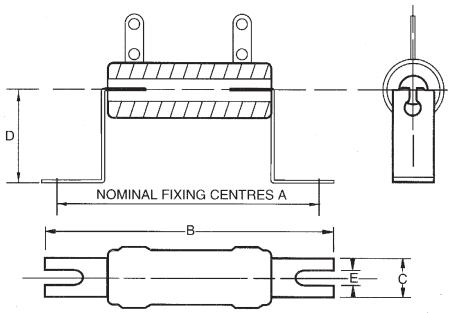

Figure 12

Ordering Procedure

Mounting brackets should be ordered in units and the type reference specified.

Table 8 Mounting plug dimensions (mm) See Fig. 13.

Type	A	B Min.	B Max.	C
1601				
1602				
1603	1.6	3.7	5.3	M4
1604				
1906				
1605				
1606	1.6	3.7	5.3	M5
1908				
1607				
1608	3.2	5.2	6.8	M6
1609				

F type bushes are suitable for termination styles B, 4B AP and AW

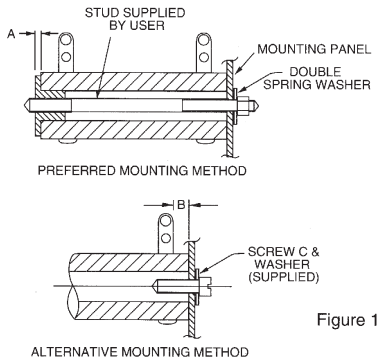

Figure 13

Ordering Procedure

Mounting plugs are denoted by the prefix 'F' added to the size reference;
e.g. BF1602 and APF1602.

TT electronics
Welwyn Components

Ordering Procedure

Specify the full type reference, resistance value and tolerance, using IEC 62 code references.

The addition of L to the prefix describing terminal configuration indicates Ayrton-Perry winding.

Example: Electrically live ferrule terminated 1601 size at 10 ohms and 5% -

C	1601	-	10R	J	I

Adjustable Option

	Fixed
V	Adjustable

Termination Style

B	AP	AW	4B	CB	C	CP	See Figures 2 to 8

Winding & Mounting Options

	Standard
L	Low Inductabce
F	Mounting plug

Tube Size

Value (USE IEC62 code)

Tolerance (use IEC62 code)

F	1%
G	2%
J	5%
K	10%

Packing

I	Box	Standard

Note - consult data sheet in detail for valid combinations.

Minimium Ordering Quantity: 10
Order Multiple: 1