JEWEL HILL ELECTRONIC CO.,LTD.

SPECIFICATIONS FOR
LCD MODULE

Module No. GB160160A

Office Address: Rm. 518,5/F., 101 Shangbu Industrial District,
HuaqiangNorthRoad, Shenzhen, China
TEL : (86)-755-83362489 83617492
FAX: (86)-755-83286396 83365871
E-mail: sales@jhlcd.com
jhlcd@21cn.com
Website: www.jhlcd.com

TABLE OF CONTENTS

LCM NUMBER SYSTEM 2
1. GENERAL DESCRIPTION 3
2. FEATURES 3
3. MECHANICAL SPECIFICATION 3
4. MECHANICAL DIMENSION 4
5. MAXIMUM RATINGS 5
6. ELECTRICAL CHARACTERISTICS 5
7. MODULE FUNCTION DESCRIPTION 6
8. ELECTRO-OPTICAL CHARACTERISTICS 14
9. RELIABILITY 18
10. PRECAUTIONS FOR USING LCD MODULES 19
11. USING LCD MODULES 21
12. REVISION HISTORY 23
SAMPLE APPROVED REPORT 24

LCM Number System

GB 160160 A S Y C Y N D A - V00

- VERSION NUMBER: V00~V99
- IC TYPE:
  A: BONDING IC, WITH CONTROLLER
  B: BONDING IC, WITHOUT CONTROLLER
  C: SMT IC, WITH CONTROLLER
  D: SMT IC, WITHOUT CONTROLLER
  O: OTHER TYPE
- VIEWING DIRECTION:
  U: UPPER(12:00); D: DOWN(6:00)
  L: LEFT(9:00); R: RIGHT(3:00);
- TEMPERATURE RANGE:
  N: NORMAL TEMPERATURE RANGE
  M: MIDDLE TEMPERATURE RANGE
  W: WIDE TEMPERATURE RANGE
  S: SUPER WIDE TEMPERATURE RANGE
- BACKLIGHT COLOR:
  A: AMBER; B: BLUE; Y: YELLOW-GREEN
  R: RED; W: WHITE; O: THER COLOR
- BACKLIGHT TYPE:
  A: TRANSFLECTIVE, EL BACKLIGHT
  B: TRANSMISSIVE, EL BACKLIGHT
  C: TRANSFLECTIVE, LED BACKLIGHT
  D: TRANSMISSIVE, LED BACKLIGHT
  E: TRANSFLECTIVE, CCFL BACKLIGHT
  F: TRANSMISSIVE, CCFL BACKLIGHT
  G: REFLECTIVE,NONE BACKLIGHT
- LCD COLOR MODE:
  G: GRAY; Y: YELLOW-GREEN; B: BLUE;
  W: BLACK-WHITE; O: OTHER
- LCD TYPE:
  N: TN; H: HTN; S: STN
  F: FSTN; X: OTHER
- SERIAL NUMBER: A~Z
- GRAPHIC MODULEs: NUMBER OF COMMONs
  CHARACTER MODULEs: NUMBER OF LINE
- GRAPHIC MODULEs:NUMBER OF SEGMENTs
  CHARACTER MODULEs:
  NUMBER OF CHAR. PER LINE
- COB & SMT LCM

1. GENERAL DESCRIPTION

The GB160160A is a 160 x 160 Dots Graphics LCD module. It has a STN panel composed of 160segments and 160 commons. The LCM can be easily accessed by micro-controller via parallel interface.

2. FEATURES

Display Mode	Transflective and Positive
	STN(Y-G) module
Display Format	Graphic 160 x 160 dots
Input Data	Parallel data input from MPU
Multiplexing Ratio	1/160 Duty
Bias	1/12 Bias
Viewing Direction	6 O'clock
Backlight	LED (Yellow-Green)

3. MECHANICAL SPECIFICATION

Item	Specifications	Unit
Dimensional outline	88.8 x 88.8 x 14.5(max)	mm
Resolution	160segs x 160coms	dots
Active area	60.775(W) x 60.775(H)	mm
Dots pitch	0.38(W)×0.38(H)	mm
Dots size	0.355(W)×0.355 (H)	mm

4. MECHANICAL DIMENSION

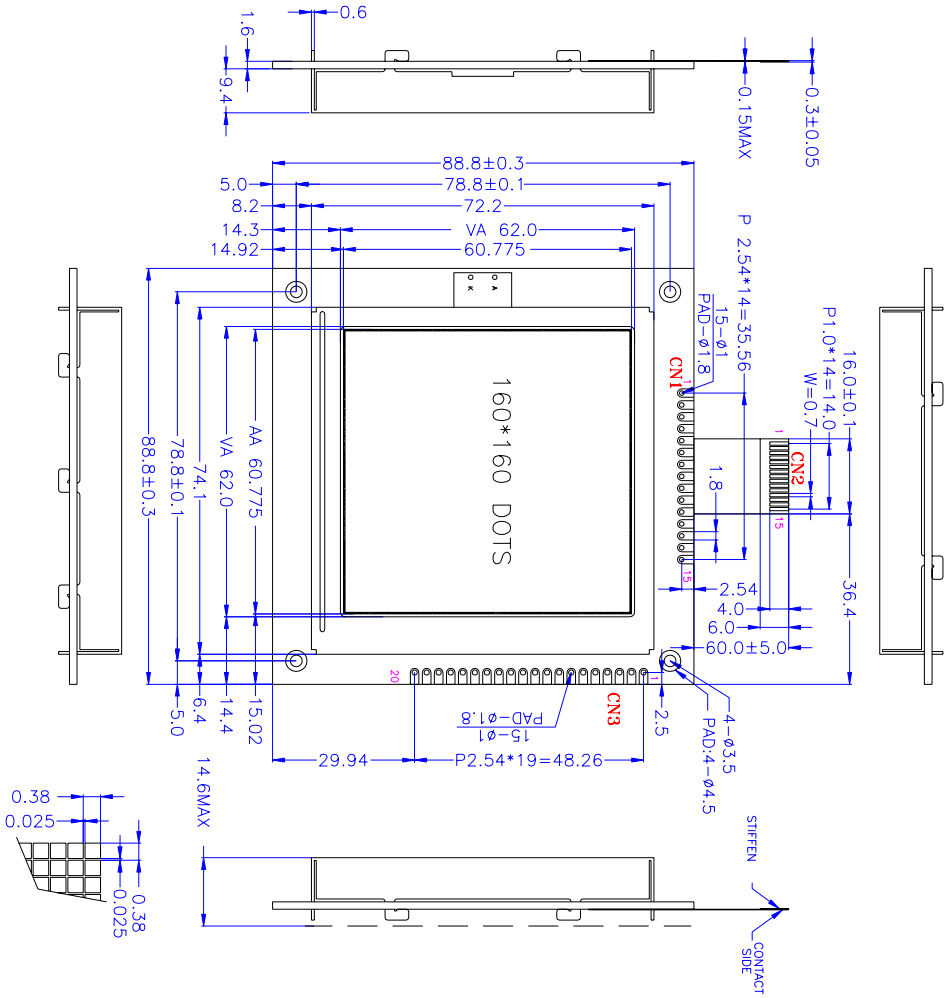

CN1&CN2

NO.	SYMBOL
1	VSS
2	M
3	FLM
4	CL1
5	CL2
6	D3
7	D2
8	D1
9	D0
10	VEE
11	VDD
12	VO
13	/DISP
14	K
15	A

CN3:

NO.	SYMBOL
1	VSS
2	VDD
3	VO
4	/RD
5	/RW
6	/CE
7	C/D
8	DB0
9	DB1
10	DB2
11	DB3
12	DB4
13	DB5
14	DB6
15	DB7
16	/RES
17	VOUT
18	LEDA
19	LEDK
20	NC

5. MAXIMUM RATINGS

Item	Symbol	Min	Max	Unit	Note
Supply voltage	V_{DD} - Vss	-0.3	5.5	V	
	V_{LCD}	-0.3	24.0	V	
Input Voltage	V_{IN}	-0.3	V_{DD}+0.3	V	
Operating temperature	T_{OPR}	0	+50	℃	
Storage temperature	T_{STR}	-10	+60	℃	
Humidity	---	---	90	%RH	

6. ELECTRICAL CHARACTERISTICS

Item		Symbol	Condition	Min.	Typ.	Max.	Unit
Supply Voltage	Logic	V_{DD}	---	---	5.0	---	V
Input Voltage	H level	V_{IH}	---	0.8V_{DD}	---	V_{DD}	V
	L level	V_{IL}		V_{SS}	---	0.2V_{DD}	
Current Consumption (LCD DRIVER)		I_{DD}	V_{DD}=5.0V; V_{LCD}=22.2V, T_{amb}=25℃;	---	---	1.5	mA
LCD Driving Voltage		V_{LCD}	Bias=1/12 VLCD=VDD-V5	17.0	17.5	18.0	V
Current Consumption (With LED BackLight)		I_{LED}	V_{DD}=5.0V; V_{LED}=4.2V,T_{amb}=25℃;	---	---	TBD	mA

7. MODULE FUNCTION DESCRIPTION

7.1. PIN DESCRIPTION

INTERFACE WITH CN1 & CN2:

Pin No.	Symbol	Description
1	VSS	Power supply for Ground (0V)
2	M	AC Signal for LCD Driver Output
3	FLM	Data Input for Common ICs
4	CL1	Data Latch Colok
5	CL2	Data Shift Colok
6	D3	Display Data Input Terminal for Segment ICs
7	D2	
8	D1	
9	D0	
10	VEE	Power Supply for Negative Voltage
11	VDD	Power supply for positive (+5V)
12	V0	VLCD Voltage Regulation Terminal
13	/DISPOFF	Display OFF Control
14	K	Power Supply for LED BackLight Negative
15	A	Power Supply for LED BackLight Positive

INTERFACE WITH CN3:

Pin No.	Symbol	Description
1	VSS	Power Supply For Ground(0V)
2	VDD	Power Supply For Positive(+5V)
3	VO	VLCD Voltage Regulation Terminal
4	/RD	Read Signal Input Terminal
5	/RW	Write Signal Input Terminal
6	/CE	Chip Selection Terminal
7	C/D	Command/Data Selection Terminal
8	DB0	8-bit bi-directional Data Bus
9	DB1	
10	DB2	
11	DB3	
12	DB4	
13	DB5	
14	DB6	
15	DB7	
16	/RES	Reset Selection Terminal
17	VOUT	Negative Voltage Input/Output Terminal
18	LEDA	Power Supply for Backlight Positive
19	LEDK	Power Supply for Backlight Negative
20	NC	No Connect

7.2 TIMING CHARACTERISTICS

(1) Segment Driver Application

(V_{SS} = 0V, Ta = - 30 – +85°C)

Characteristic	Symbol	Test Condition	(1) V_{DD} = 5V ±10%			(2) V_{DD} = 3V ±10%			Unit
			Min.	Typ.	Max.	Min.	Typ.	Max.	
Clock cycle time	t_{CY}	Duty = 50%	125	-	-	250	-	-	ns
Clock pulse width	t_{WCK}	-	45	-	-	95	-	-	ns
Clock rise / fall time	t_R/t_F	-	-	-	-	-	-	30	ns
Data set-up time	t_{DS}	-	30	-	-	65	-	-	ns
Data hold time	t_{DH}	-	30	-	-	65	-	-	ns
Clock set-up time	t_{CS}	-	80	-	-	120	-	-	ns
Clock hold time	t_{CH}	-	80	-	-	120	-	-	ns
Propagation delay time	t_{PHL}	ELB Output	-	-	60	-	-	125	ns
		ERB Output			60			125	ns
ELB,ERB set-up time	t_{PSU}	ELB Input	30	-	-	65	-	-	ns
		ERB Input	30			65			ns
DISPOFFB low pulse width	t_{WDL}	-	1.2	-	-	1.2	-	-	µs
DISPOFFB clear time	t_{CD}	-	100	-	-	100	-		ns
M - OUT propagation delay time	t_{PD1}	C_L = 15pF	-	-	1.0	-	-	1.2	µs
CL1 - OUT propagation delay time	t_{PD2}		-	-	1.0	-	-	1.2	µs
DISPOFFB - OUT propagation delay time	t_{PD3}		-	-	1.0	-	-	-	µs

(2) Common Driver Application

(V_{SS} = 0V, Ta = - 30 – +85°C)

Characteristic	Symbol	Test Condition	(1) V_{DD} = 5 V ± 10%			(2) V_{DD} = 3V ±10%			Unit
			Min.	Typ.	Max.	Min.	Typ.	Max.	
Clock cycle time	t_{CY}	Duty = 50%	250	-	-	500	-	-	ns
Clock pulse width	t_{WCK}	-	45	-	-	95	-	-	
Clock rise / fall time	t_R/t_F	-	-	-	50	-	-	50	
Data set-up time	t_{DS}	-	30	-	-	65	-	-	
Data hold time	t_{DH}	-	30	-	-	65	-	-	
DISPOFFB low pulse width	t_{WDL}	-	1.2	-	-	1.2	-	-	µs
DISPOFFB clear time	t_{CD}	-	100	-	-	100	-	-	ns
Output delay time	t_{DL}	C_L = 15pF	-	-	200	-	-	250	
M – OUT propagation delay time	t_{PD1}		-	-	1.0	-	-	1.2	µs
CL1 - OUT propagation delay time	t_{PD2}		-	-	1.0	-	-	1.2	
DISPOFFB - OUT propagation delay time	t_{PD3}		-	-	1.0	-	-	1.2	

(3) Segment Driver Application Timing

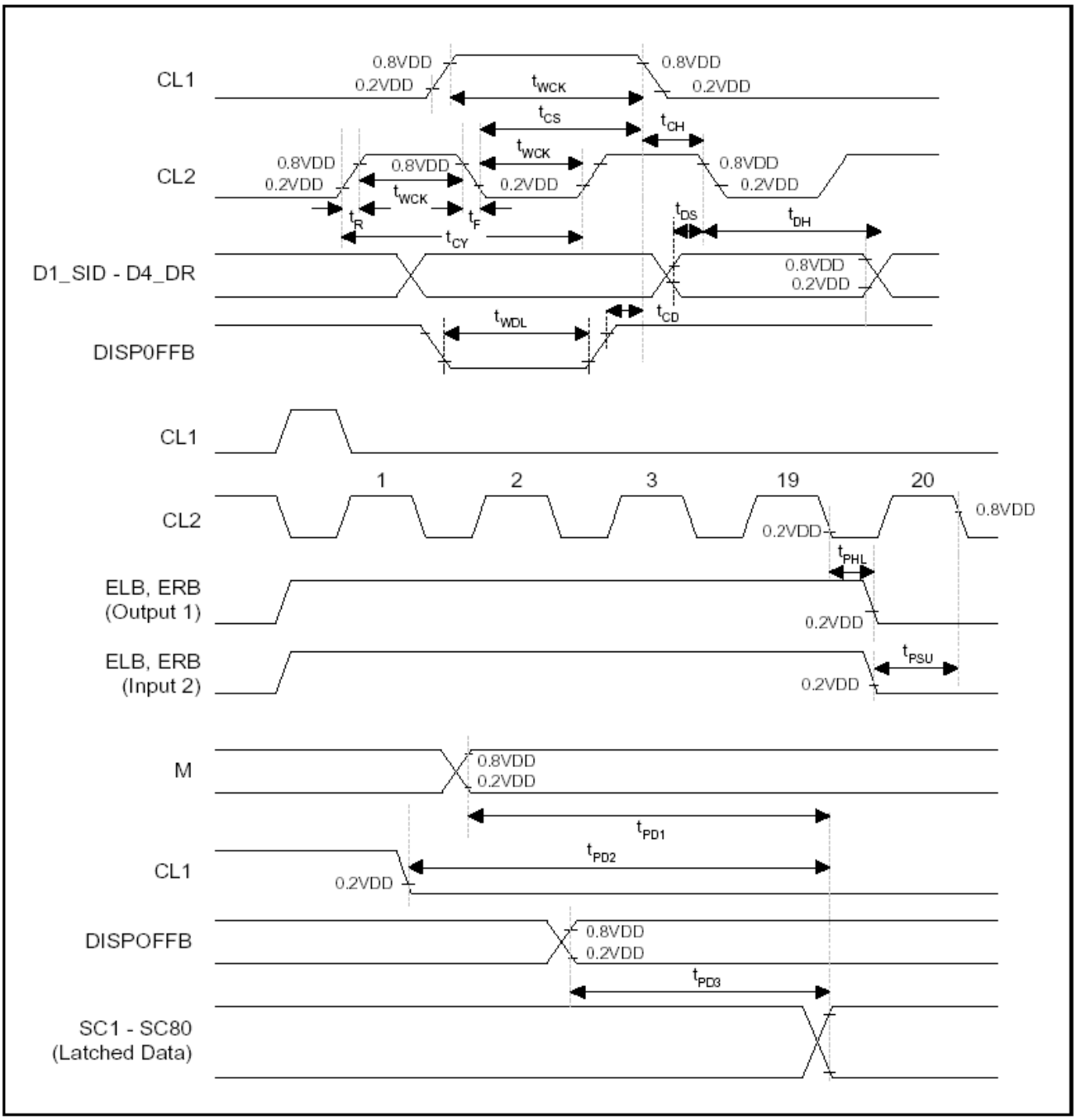

(4) Common Driver Application Timing

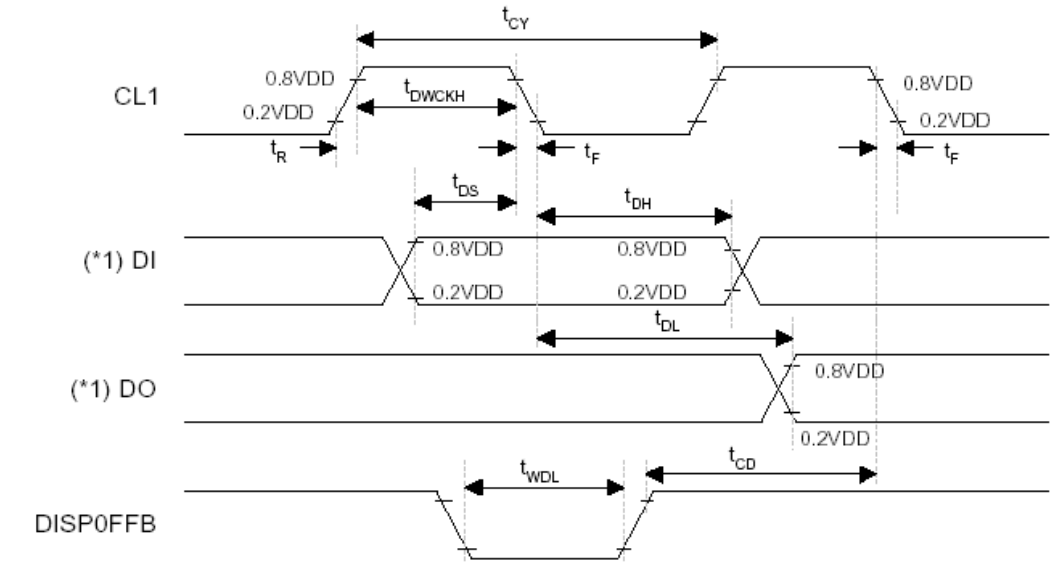

(*1) When in single-type interface mode
DI => D2_DL (SHL = L), D4_DR (SHL = H)
DO => D4_DR (SHL = L), D2_DL (SHL = H)
When in dual-type interface mode
DI => D2_DL and D3_DM (SHL = L), D4_DR and D3_DM (SHL = H)
DO => D4_DR (SHL = L), D2_DL (SHL = H)

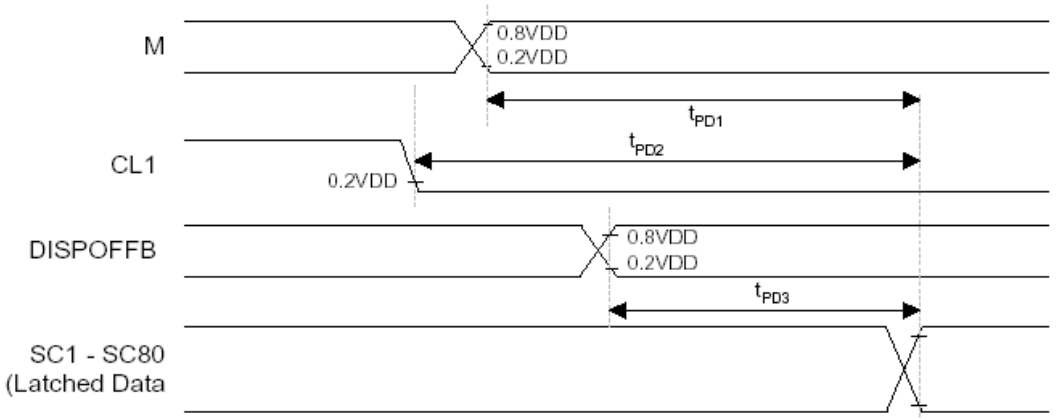

(5) Common / Segment Driver Timing (1/160 DUTY)

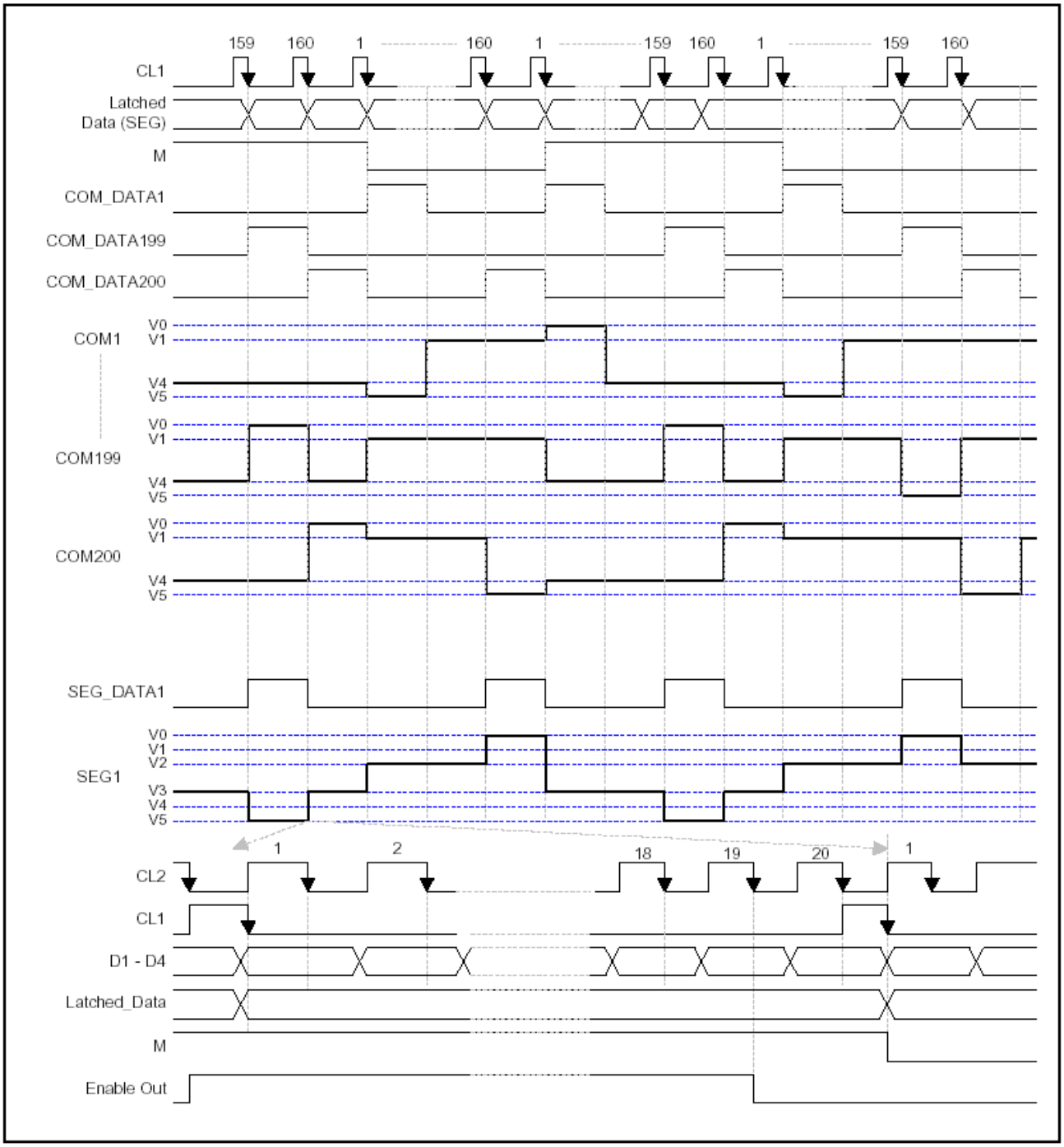

7.3 APPLICATION OF LCM

■Circuit Block Diagram

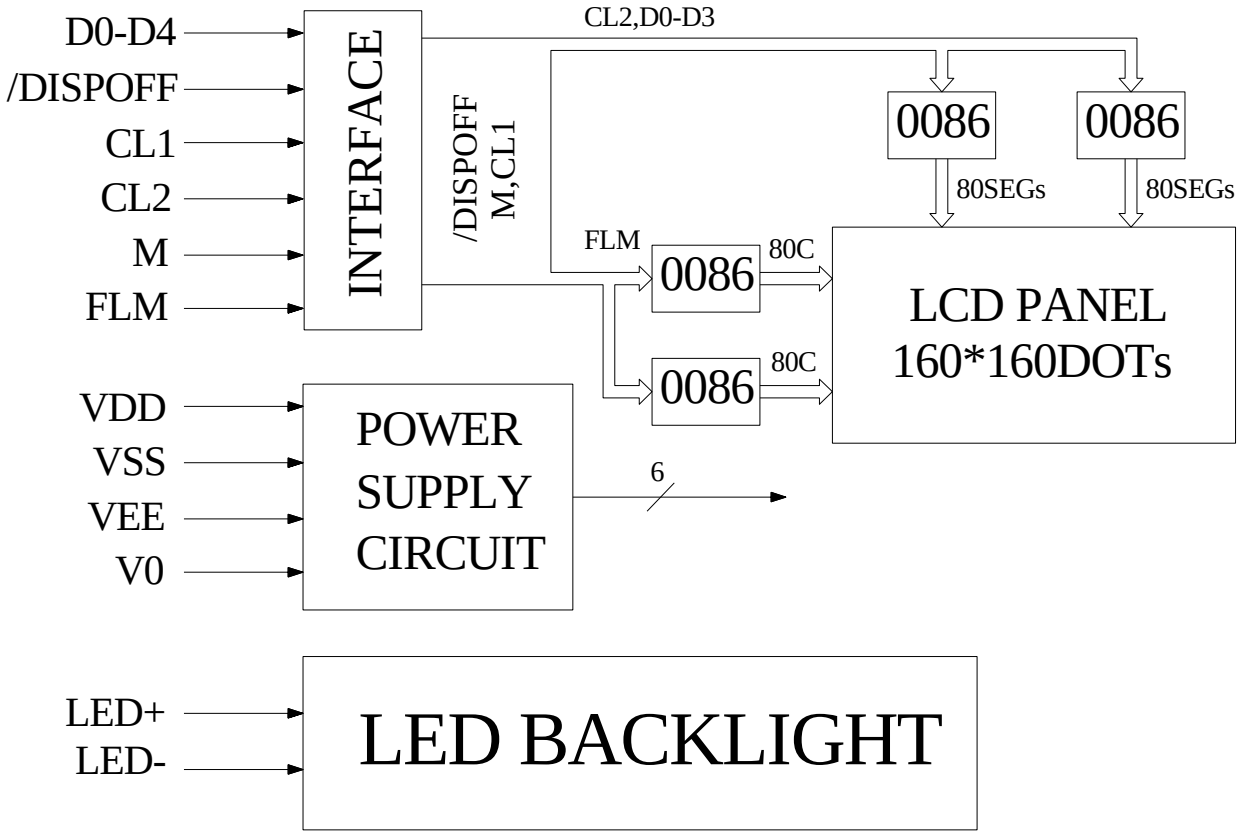

8. ELECTRO-OPTICAL CHARACTERISTICS

Item	Symbol	Condition	Temp	Min	Typ.	Max	Units	Note
LCD driving voltage	V_{LCD}	$\theta = \phi = 0$	0℃	---	17.2	---	V	NOTE1
			25℃	17.0	17.5	18.0		
			50℃	---	17.8	---		
Response Time	Rise Time (Tr)	$\theta = \phi = 0$	0℃	---	---	--	msec	NOTE2
	Decay Time (Tf)			---	----	---		
	Rise Time (Tr)		25℃	---	225	340		
	Decay Time (Tf)			---	240	360		
	Rise Time (Tr)		50℃	---	---	--		
	Decay Time (Tf)			---	---	--		
Contrast Ratio	Cr	$\theta = \phi = 0$	25℃	5	10	---	---	NOTE4

Viewing Angle Range	θ (ϕ = 0°) (6”)	ϕ = 90° (3”)	ϕ =180° (12”)	ϕ =270° (9”)	備註
θ (25℃) CR≥2	45	35	25	35	Deg NOTE3

● For panel only

• Electro-Optical Characteristics Measuring Equipment(DMS501)

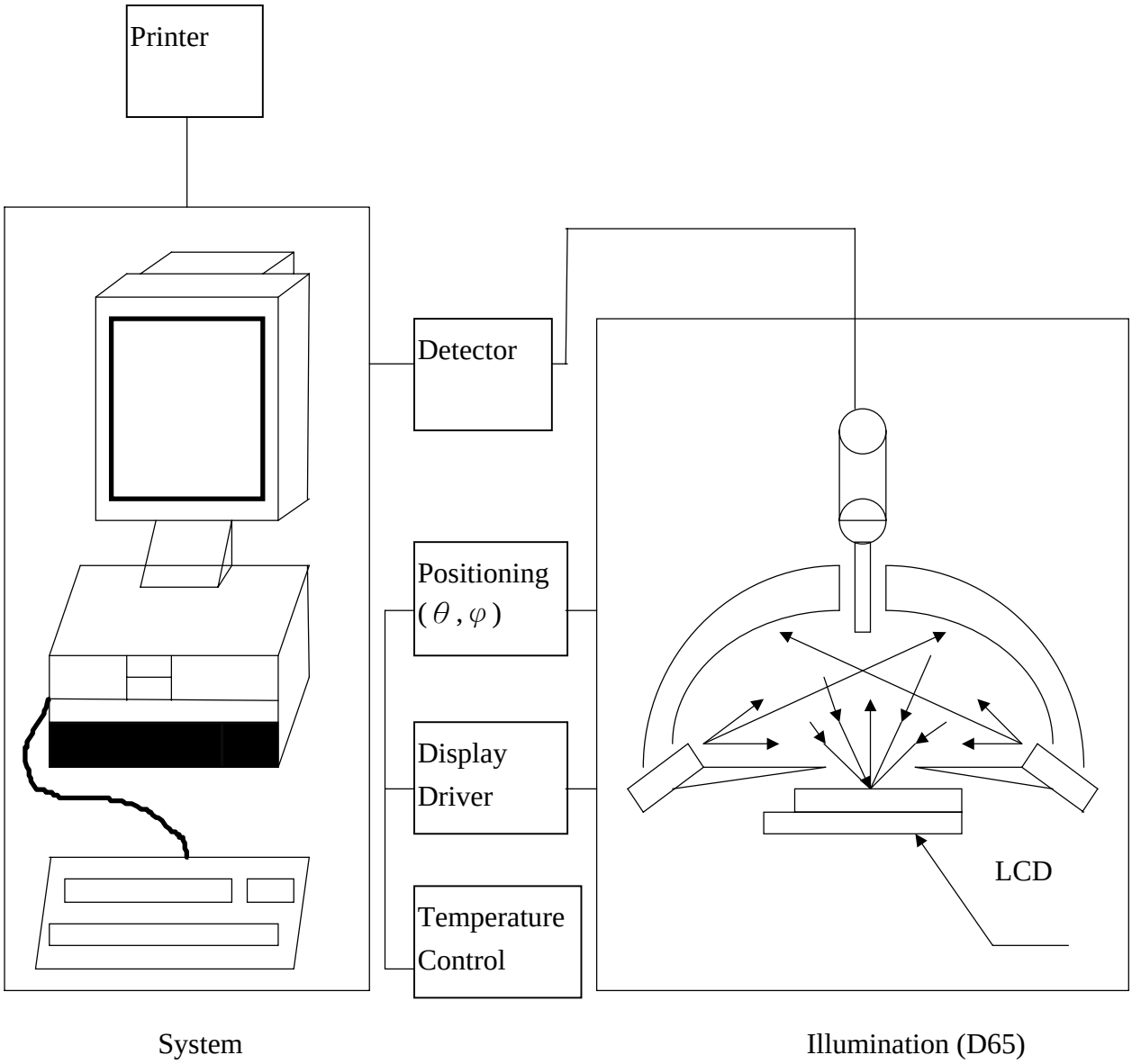

• Note 1. Definition of Driving Voltage(Vlcd) :

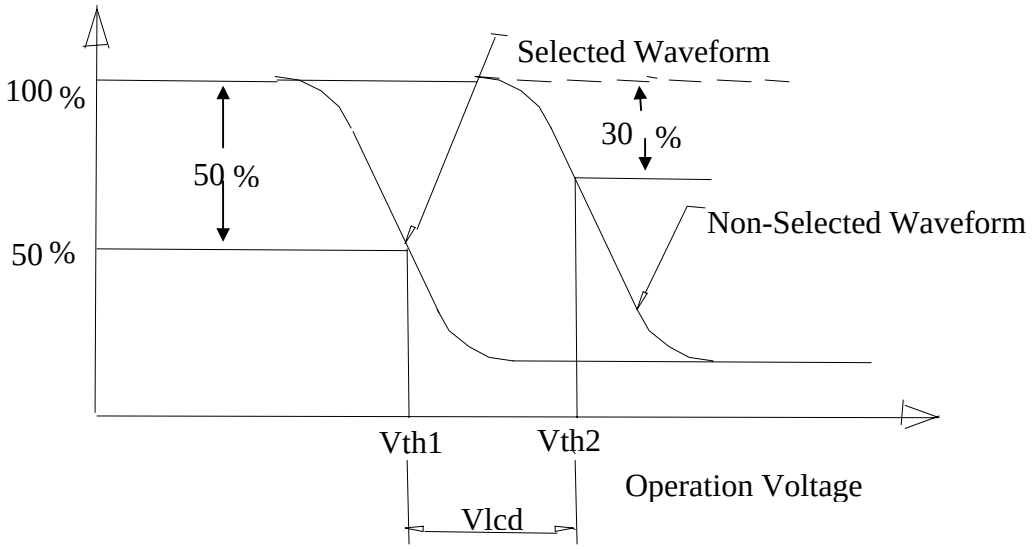

• Note 2. Definition of Optical Response Time :

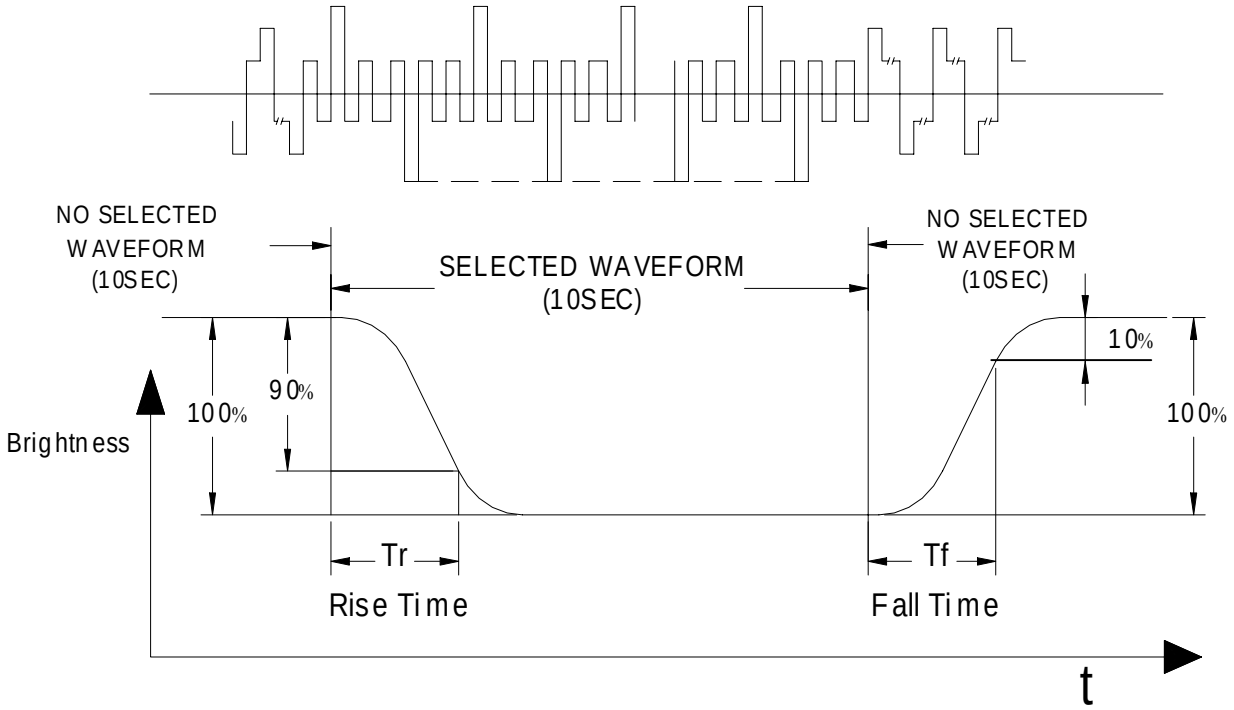

• Note 3. Definition of Viewing Angle θ and ϕ :

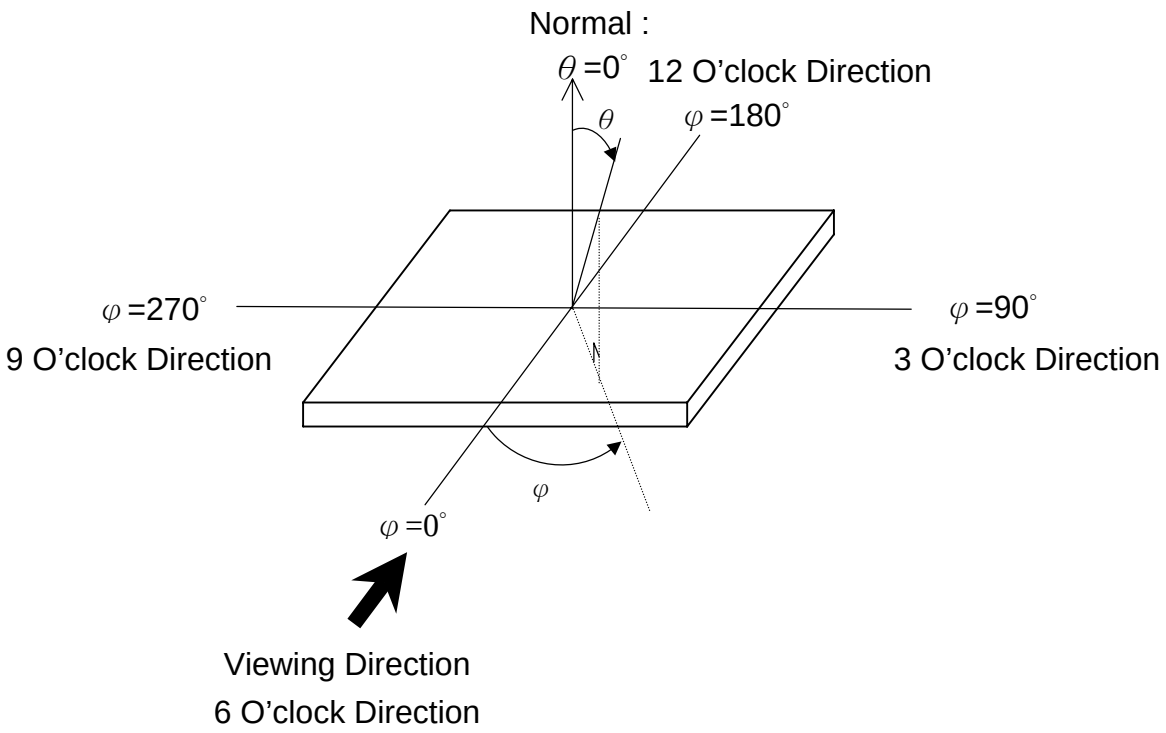

• Note 4. Definition of Contrast ratio(CR) :

$$CR = \frac{\text{Brightness of Non-selected Segment (B2)}}{\text{Brightness of Selected Segment (B1)}}$$

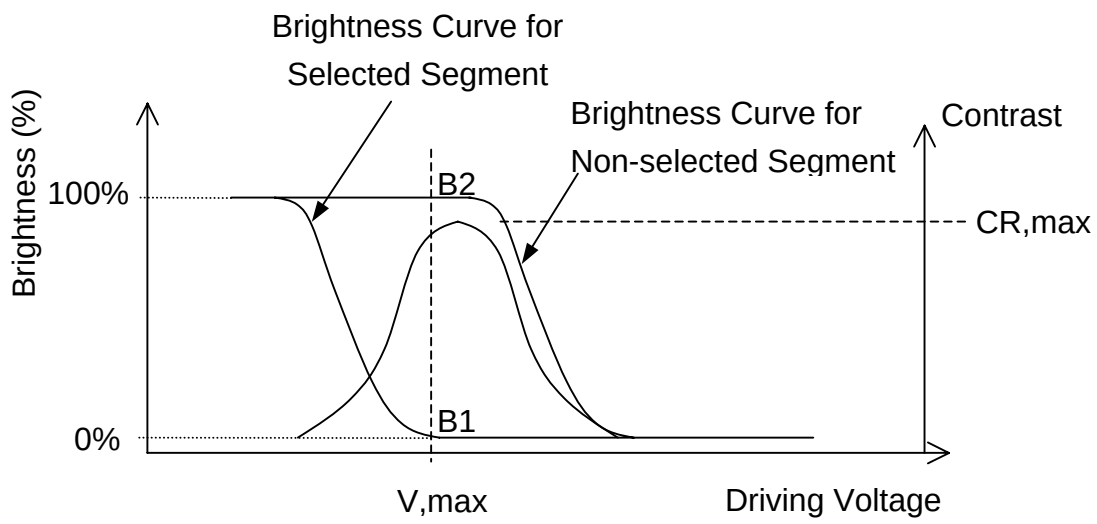

9. RELIABILITY

9.1. MTBF

The LCD module shall be designed to meet a minimum MTBF value of 50000 hours with normal. (25°C in the room without sunlight)

9.2. TESTS

NO.	ITEM	CONDITION	CRITERION
1	High Temperature Operating	50℃ 120Hrs	◦ No Defect Of Operational Function In Room Temperature Are Allowable. ◦ IDD of LCM in Pre-and post-test should follow specification
2	Low Temperature Operating	0℃ 120Hrs	
3	High Temperature/ Humidity Non-Operating	50℃ ,90%RH ,120 Hrs	
4	High Temperature Non-Operating	60℃ 120Hrs	
5	Low Temperature Non-Operating	-10℃ 120Hrs	
6	Temperature Cycling Non-Operating	0℃(30Min)↔ 50℃(30Min) 10 CYCLES	

Notes: Judgments should be mode after exposure in room temperature for two hours.

10. PRECAUTIONS FOR USING LCD MODULES

10.1. HANDLING PRECAUTIONS

(1) The display panel is made of glass. Do not subject it to a mechanical shock or impact by dropping it.

(2) If the display panel is damaged and the liquid crystal substance leaks out, be sure not to get any in your mouth. If the substance contacts your skin or clothes, wash it off using soap and water.

(3) Do not apply excessive force to the display surface or the adjoining areas since this may cause the color tone to vary.

(4) The polarizer covering the display surface of the LCD module is soft and easily scratched. Handle this polarizer carefully.

(5) If the display surface becomes contaminated, breathe on the surface and gently wipe it with a soft dry cloth. If it is heavily contaminated, moisten a cloth with one of the following solvents:

- Isopropyl alcohol
- Ethyl alcohol

(6) Solvents other than those above mentioned may damage the polarizer.
Especially, do not use the following:

- Water
- Ketone
- Aromatic solvents

(7) Extra care to minimize corrosion of the electrode. Water droplets, moisture condensation or a current flow in a high-humidity environment accelerates corrosion of the electrode.

(8) Install the LCD Module by using the mounting holes. When mounting the LCD Module, make sure it is free of twisting, warping and distortion. In particular, do not forcibly pull or bend the I/O cable or the backlight cable.

(9) Do not attempt to disassemble or process the LCD Module.

(10) NC terminal should be open. Do not connect anything.

(11) If the logic circuit power is off, do not apply the input signals.

(12) To prevent destruction of the elements by static electricity, be careful to maintain an optimum work environment.

- Be sure to ground the body when handling he LCD Module.
- Tools required for assembling, such as soldering irons, must be properly grounded.
- To reduce the amount of static electricity generated, do not conduct assembling and other work under dry conditions.

-The LCD Module is coated with a film to protect the display surface. Exercise care when peeling off this protective film since static electricity may be generated.

10.2. STORAGE CONDITIONS

When storing, avoid the LCD module to be exposed to direct sunlight of fluorescent lamps. For stability, to keep it away form high temperature and high humidity environment (The best condition is : 23±5°C, 45±20%RH). ESD protection is necessary for long-term storage also.

10.3. OTHERS

Liquid crystals solidify under low temperature (below the storage temperature range) leading to defective orientation or the generation of air bubbles (black or white). Air bubbles may also be generated if the module is subject to a low temperature.

If the LCD Module have been operating for a long time showing the same display patterns the display patterns may remain on the screen as ghost images and a slight contrast irregularity may also appear. A normal operating status can be recovered by suspending use for some time. It should be noted that this phenomenon does not adversely affect performance reliability.

To minimize the performance degradation of the LCD Module resulting from destruction caused by static electricity etc. exercise care to avoid holding the following sections when handling the modules.

- Exposed area of the printed circuit board.
- Terminal electrode sections.

11. Using LCD modules

11.1 LIQUID CRYSTAL DISPLAY MODULES

LCD is composed of glass and polarizer. Pay attention to the following items when handling.

(1) Please keep the temperature within specified range for use and storage. Polarization degradation, bubble generation or polarizer peel-off may occur with high temperature and high humidity.

(2) Do not touch, push or rub the exposed polarizers with anything harder than a HB pencil lead (glass, tweezers, etc).

(3) N-hexane is recommended for cleaning the adhesives used to attach front/rear polarizers and reflectors made of organic substances, which will be damaged by chemicals such as acetone, toluene, toluene, ethanol and isopropyl alcohol.

(4) When the display surface becomes dusty, wipe gently with absorbent cotton or other soft material like chamois soaked in petroleum ether. Do not scrub hard to avoid damaging the display surface.

(5) Wipe off saliva or water drops immediately, contact with water over a long period of time may cause deformation or color fading.

(6) Avoid contacting oil and fats.

(7) Condensation on the surface and contact with terminals due to cold will damage, stain or polarizers. After products are tested at low temperature they must be warmed up in a container before coming is contacting with room temperature air.

(8) Do not put or attach anything on the display area to avoid leaving marks on.

(9) Do not touch the display with bare hands. This will stain the display area and degrade insulation between terminals (some cosmetics are determinate to the polarizers).

(10) As glass is fragile, it tends to become or chipped during handling especially on the edges. Please avoid dropping or jarring.

11.2 INSTALLING LCD MODULE

Attend to the following items when installing the LCM.

(1) Cover the surface with a transparent protective plate to protect the polarizer and LC cell.

(2) When assembling the LCM into other equipment, the spacer to the bit between the LCM and the fitting plate should have enough height to avoid causing stress to the module surface, refer to the individual specifications for measurements. The measurement tolerance should be ±0.1mm.

11.3 ELECTRO-STATIC DISCHARGE CONTROL

Since this module uses a CMOS LSI, the same careful attention should be paid for electrostatic discharge as for an ordinary CMOS IC.

(1) Make certain that you are grounded when handing LCM.
(2) Before removing LCM from its packing case or incorporating it into a set, be sure the module and your body have the same electric potential.
(3) When soldering the terminal of LCM, make certain the AC power source for the soldering iron does not leak.
(4) When using an electric screwdriver to attach LCM, the screwdriver should be of ground potentiality to minimize as much as possible any transmission of electromagnetic waves produced sparks coming from the commutator of the motor.
(5) As far as possible, make the electric potential of your work clothes and that of the workbenches to the ground potential.
(6) To reduce the generation of electro-static discharge, be careful that the air in the work is not too dried. A relative humidity of 50%-60% is recommended.

11.4 PRECAUTIONS FOR OPERATION

(1) Viewing angle varies with the change of liquid crystal driving voltage (Vo). Adjust Vo to show the best contrast.
(2) Driving the LCD in the voltage above the limit will shorten its lifetime.
(3) Response time is greatly delayed at temperature below the operating temperature range. However, this does not mean the LCD will be out of the order. It will recover when it returns to the specified temperature range.
(4) If the display area is pushed hard during operation, the display will become abnormal. However, it will return to normal if it is turned off and then on.
(5) Condensation on terminals can cause an electrochemical reaction disrupting the terminal circuit. Therefore, this product must be used and stored within the specified condition of 23±5°C, 45±20%RH.
(6) When turning the power on, input each signal after the positive/negative voltage becomes stable.

11.5 SAFETY

(1) It is recommended to crush damaged or unnecessary LCDs into pieces and wash them off with solvents such as acetone and ethanol, which should later be burned.
(2) If any liquid leaks out of a damaged glass cell and comes in contact with the hands, wash off thoroughly with soap and water.

12. REVISION HISTORY

Version	Revise record	Date
1.0	Original version	05-12-19
2.0	Change Outline	06-04-26
3.0	Change contact mode	06-08-04

SAMPLE APPROVED REPORT
(样品确认单)

SAMPLE MODEL NO. (样品型号)	GB160160A
SAMPLE SERIES NUMBER NO. (样品序号)	
SAMPLE QUANTITY (样品数量)	
COLOR/TYPE (底色/类型)	YELLOW-GREEN
VIEWING DIRECTION (视角)	6:00
DRIVING METHOD (驱动参数)	1/160Duty, 1/12Bias
LOGIC VOLTAGE (工作电压)	5.0V
LCD VOP (LCD 驱动电压)	17.5V
OPERATING TEMP. (操作温度)	0~50℃
STORAGE TEMP. (储存温度)	-10~60℃
POLARIZER MODE (偏光片模式)	TRANSFLECTIVE/POSITIVE
CONTROLLER/DRIVER IC(控制/驱动 IC)	NONE/S6B0086
BACKLIGHT COLOR/TYPE (背光源类型/颜色)	LED/YELLOW-GREEN
DRAWING REV/NO./QUANTITY (图纸版本/数量)	
SPECIFICATION (规格书　份数)	

REMARKS：
(备注)
WRIT BY：_____ DATE：_____ APROV BY：_____ DATE：_____

CUSTOMER'S APPROVAL (客户确认)：

1） FUNCTION （功能）： ☐ OK ☐ N.G.
2） DRIVER CONDITION （驱动条件）： ☐ OK ☐ N.G.
3） DISPLAY MODE （显示模式）： ☐ OK ☐ N.G.
4） VIEWING ANGLE （视角）： ☐ OK ☐ N.G.
5） BACKLIGHT （背光源）： ☐ OK ☐ N.G.
6） DISPLAYING PATTERN （显示效果）： ☐ OK ☐ N.G.

CUSTOMER'S CONCLUSIONS (客户意见)：_____
_____
_____

CUSTOMER'S SIGNATURE（客户签名）：_____ DATE (日期)：_____