240-264J
MIL-DTL-26482 Series II Type Filter Connector
Jam Nut Receptacle

MIL-C-26482 Series II	Filter Connector Product Code	Shell Style	Connector Class	Insert Arrangement	Contact Gender	Termination	Filter Type	Capacitance	Flange Mounting Style	Alternate Key Position
240	- 264	J	P	16-26	P	S	P	A	N	N

- **Shell Style:** *J - Jam Nut*
- **Connector Class:** *(See Table I)*
- **Insert Arrangement:** *Per MIL-STD-1669*
- **Contact Gender:** *P - Pin*, *S - Socket*
- **Termination:** *S - Solder Cup*
- **Filter Type:** *P - Pi Circuit*, *C - C Circuit*
- **Capacitance:** *(See Table II)*
- **Flange Mounting Style:** *N - Not Applicable*
- **Alternate Key Position:** *W, X, Y, Z, N = Normal*

J - Jam Nut

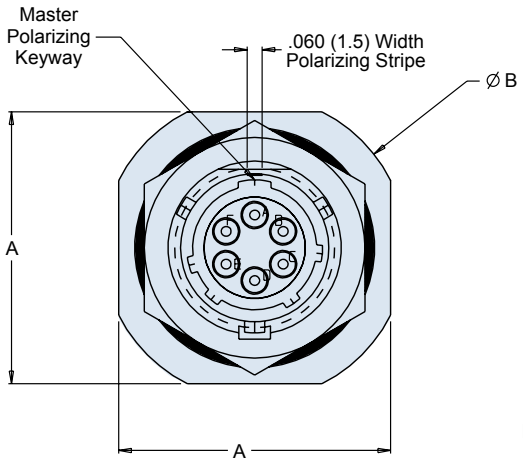

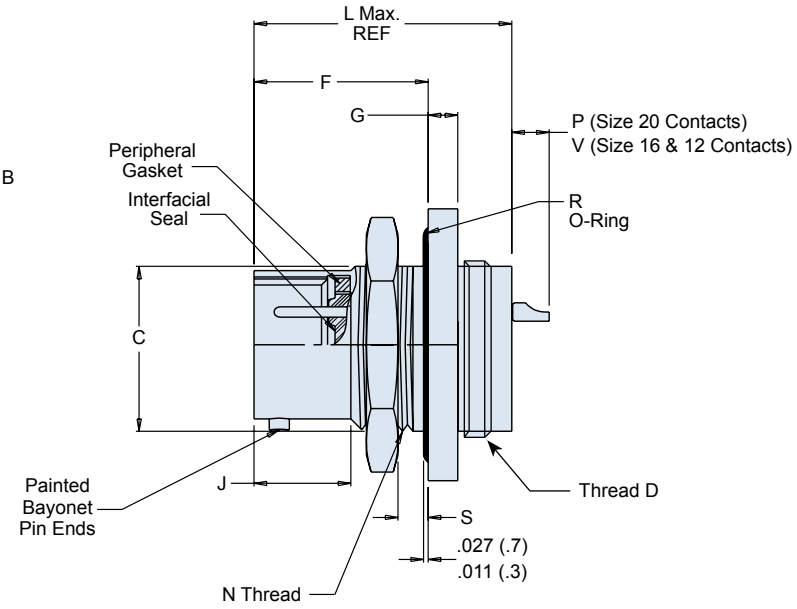

TABLE II: CAPACITOR ARRAY CODE CAPACITANCE RANGE

CLASS	PI - CIRCUIT (pF)	C - CIRCUIT (pF)
X*	160,000 - 240,000	80,000 - 120,000
Y*	80,000 - 120,000	40,000 - 60,000
Z*	60,000 - 90,000	30,000 - 45,000
A	38,000 - 56,000	19,000 - 28,000
B	32,000 - 45,000	16,000 - 22,500
C	18,000 - 33,000	9,000 - 16,500
D	8,000 - 12,000	4,000 - 6,000
E	3,300 - 5,000	1,650 - 2,500
F	800 - 1,300	400 - 650
G	400 - 600	200 - 300

* Reduced DWV – Please consult factory.

TABLE I: CONNECTOR CLASS

SYM	CLASS	MATERIAL	FINISH DESCRIPTION
M	Environmental	Aluminum	Electroless Nickel
MT	Environmental	Aluminum	Ni-PTFE *1000 Hour Grey™* Nickel Fluorocarbon Polymer
NF	Environmental	Aluminum	Cadmium O.D. Over Electroless Nickel
P	Environmental	Stainless Steel	Electro-Deposited Nickel
ZN	Environmental	Aluminum	Zinc-Nickel Over Electroless Nickel
H2	Hermetic	Stainless Steel	Electroless Nickel

© 2008 Glenair, Inc.

CAGE CODE 06324

Printed in U.S.A.

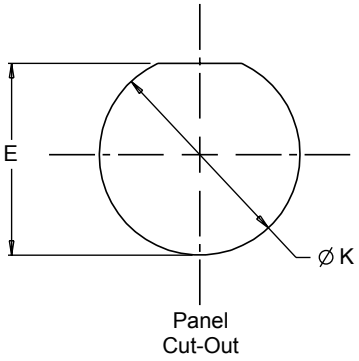

TABLE III: DIMENSIONS

SHELL SIZE	A +.000 (0) -.031 (.8) LENGTH	B +.000 (0) -.031 (.8) ACROSS FLANGE CORNER	C +.000 (0) -.010 (.3) MTG. FLAT	D THREAD (CLASS 2)	E PANEL FLAT LOCATION	F MOUNTING FLANGE LOCATION	G MOUNTING FLANGE THINCKNESS
8	.954 (24.2)	1.078 (27.4)	.530 (13.5)	.500-20 UNF	.536(13.6)	.707 (18.0) .691 (17.6)	.113 (2.9) .097 (2.5)
10	1.078 (27.4)	1.203 (30.6)	.655 (16.6)	.625-24 UNEF	.661 (16.8)	.707 (18.0) .691 (17.6)	.113 (2.9) .097 (2.5)
12	1.266 (32.2)	1.391 (35.3)	.818 (20.8)	.750-20 UNEF	.824 (20.9)	.707 (18.0) .691 (17.6)	.113 (2.9) .097 (2.5)
14	1.391 (35.3)	1.516 (38.5)	.942 (23.9)	.875-20 UNEF	.948 (24.1)	.707 (18.0) .691 (17.6)	.113 (2.9) .097 (2.5)
16	1.516 (38.5)	1.641 (41.7)	1.062 (27.0)	1.000-20 UNEF	1.072 (27.2)	.707 (18.0) .691 (17.6)	.113 (2.9) .097 (2.5)
18	1.641 (41.7)	1.766 (44.9)	1.191 (30.3)	1.0625-18 UNEF	1.197 (30.4)	.707 (18.0) .691 (17.6)	.113 (2.9) .097 (2.5)
20	1.828 (46.4)	1.954 (49.6)	1.316 (33.4)	1.1875-18 UNEF	1.322 (33.6)	.772 (19.6) .754 (19.2)	.148 (3.8) .128 (3.3)
22	1.954 (49.6)	2.078 (52.8)	1.441 (36.6)	1.3125-18 UNEF	1.447 (36.8)	.772 (19.6) .754 (19.2)	.148 (3.8) .128 (3.3)
24	2.078 (52.8)	2.203 (56.0)	1.566 (39.8)	1.4375-18 UNEF	1.572 (39.9)	.803 (20.4) .785 (20.0)	.148 (3.8) .128 (3.3)

TABLE III: DIMENSIONS (CONTINUED)

SHELL SIZE	J +/- .010 (.3) TO THREAD CHAMFER	K +.010 (.3) -.005 (.1) PANEL MOUNTING HOLE	L OVERALL LENGTH	N UNEF-2A MOUNTING THREAD	P	S PANEL THICK-NESS MIN.	S MAX.	V	MAX WEIGHT (Lbs.)
8	.368 (9.3)	.572 (14.5)	1.38 (35.1)	.5625-24	.134 (3.4) .074 (1.9)	.062 (1.6)	.187 (4.8)	.204 (5.2) .144 (3.7)	.0430 (1.1)
10	.368 (9.3)	.697 (17.7)	1.38 (35.1)	.6875-24	.134 (3.4) .074 (1.9)	.062 (1.6)	.187 (4.8)	.204 (5.2) .144 (3.7)	.0610 (1.5)
12	.368 (9.3)	.885 (22.5)	1.38 (35.1)	.875-20	.134 (3.4) .074 (1.9)	.062 (1.6)	.187 (4.8)	.204 (5.2) .144 (3.7)	.0880 (2.2)
14	.368 (9.3)	1.010 (25.7)	1.38 (35.1)	1.000-20	.134 (3.4) .074 (1.9)	.062 (1.6)	.187 (4.8)	.204 (5.2) .144 (3.7)	.1100 (2.8)
16	.368 (9.3)	1.135 (28.8)	1.38 (35.1)	1.125-18	.134 (3.4) .074 (1.9)	.062 (1.6)	.187 (4.8)	.204 (5.2) .144 (3.7)	.1310 (3.3)
18	.368 (9.3)	1.260 (32.0)	1.38 (35.1)	1.250-18	.134 (3.4) .074 (1.9)	.062 (1.6)	.187 (4.8)	.204 (5.2) .144 (3.7)	.1720 (4.4)
20	.368 (9.3)	1.385 (35.2)	1.44 (36.6)	1.375-18	.099 (2.5) .039 (1.0)	.062 (1.6)	.250 (6.4)	.169 (4.3) .109 (2.8)	.2110 (5.4)
22	.368 (9.3)	1.510 (38.4)	1.44 (36.6)	1.500-18	.099 (2.5) .039 (1.0)	.062 (1.6)	.250 (6.4)	.169 (4.3) .109 (2.8)	.2420 (6.1)
24	.395 (10.0)	1.635 (41.5)	1.44 (36.6)	1.625-18	.099 (2.5) .039 (1.0)	.062 (1.6)	.250 (6.4)	.169 (4.3) .109 (2.8)	.2930 (7.4)

© 2008 Glenair, Inc.