Type 167/184 Metallized Polyester Radial Lead Capacitors

Radial Box Metallized Polyester Capacitors for Automatic Insertion

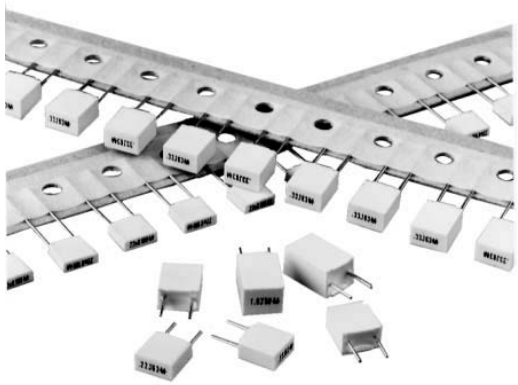

The Type 167/184 series radial lead metallized polyester box capacitors are available in bulk (Type 167) or on ammo pack or radial tape and reel (Type 184). These capacitors are constructed in rugged rectangular plastic cases and all come with 7.5 mm (0.3") lead spacing. They are good for general purpose applications such as bypass, decoupling, energy storage/discharge and arc suppression.

Highlights

- Rugged plastic case
- Case and epoxy fill meets UL94V0
- 7.5 mm (0.3") lead spacing
- Bulk, tape and reel or ammo pack
- Non-inductively wound
- Non-polar

Specifications

RoHS Compliant

Capacitance Range: 0.001 µF to 1.0 µF

Voltage Range: 63 Vdc to 630 Vdc (40 Vac to 250 Vac, 60 Hz)

Capacitance Tolerance: ±5%, ±10%, ±20%

Operating Temperature Range: –55 °C to +125 °C (with 50% Vdc derating >85 °C)

Dielectric Withstand Voltage: 1.6 x rated voltage for 2 sec @ +25 °C ±5 °C

Dissipation Factor (DF): tanδ x 10^{-4} at 25 °C ±5 °C

kHz	tanδ x 10^{-4}
1	≤100
10	≤150

Total Self Inductance (L): Approximately 8 nH

Maximum Pulse Rise Time (dv/dt):

Vn	V/µs
63	12
100	20
250	32
400	41
630	70

If the working voltage (V) is less than the nominal voltage (Vn), the capacitor can work at higher dv/dt. In this case, the maximum value allowed is obtained by multiplying the above value with the ratio Vn/V.

Long Term Stability (after two years)		
Storage		Standard Environmental Conditions
Performance		
Capacitance Change	ΔC/C	≤ ±3%

Type 167/184 Metallized Polyester Radial Lead Capacitors

Capacitor Outline Drawing

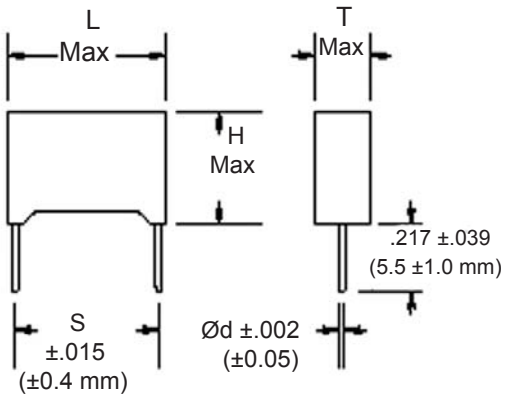

Lead length shown is as supplied on 167 Series

Soldering	
Test Conditions	
Soldering Temperature	260 °C ±5 °C
Soldering Duration	10 sec ±1 sec
Performance	
Capacitance Change ΔC/C	≤ ±2%
DF Change Δtgδ	≤30 x 10^{-4} at 10 kHz
Insulation Resistance	≥ limit value

Test Method and Performance

Insulation Resistance	
Test Conditions	
Temperature	25 °C ±5 °C
Voltage Charge Time	1 minute
Voltage Charge	50 Vdc for Vn < 100 Vdc 100 Vdc for Vn ≥ 100 Vdc
Performance	
For Vn > 100 Vdc	≥30,000 MΩ (50,000 MΩ typical)
For Vn ≤100 Vdc	≥10,000 MΩ for C ≤ 0.1μF ≥1,000 MΩ x μF for > 0.1μF

Damp Heat Test	
Test Conditions	
Temperature	+40 °C
Relative Humidity	95%
Test Duration	21 days
Performance	
Capacitance Change ΔC/C	≤ ±5%
DF Change Δtgδ	≤50 x 10^{4} at 1 kHz
Insulation Resistance	≥ 50% of limit value

Life Test	
Test Conditions	
Temperature	+85 °C
Test Duration	1000 hrs
Voltage Applied	1.25 x Vn
Performance	
Capacitance Change ΔC/C	≤ ±5%
DF Change Δtgδ	≤30 x 10^{-4} at 10 kHz
Insulation Resistance	≥ 50% of limit value

Ratings — RoHS Compliant

Cap (μF)	Catalog Part Number	Tape & Reel Ammo Pack	Inches					Millimeters				
			L	T	H	S	Ød	L	T	H	S	Ød
63 Vdc / 40 Vac												
.068	167683*63A–F	184683*63#A>–F	0.413	0.138	0.276	0.295	0.024	10.5	3.5	7.0	7.5	0.6
.10	167104*63A–F	184104*63#A>–F	0.413	0.138	0.276	0.295	0.024	10.5	3.5	7.0	7.5	0.6
.15	167154*63A–F	184154*63#A>–F	0.413	0.138	0.276	0.295	0.024	10.5	3.5	7.0	7.5	0.6
.22	167224*63A–F	184224*63#A>–F	0.413	0.138	0.276	0.295	0.024	10.5	3.5	7.0	7.5	0.6
.27	167274*63A–F	184274*63#A>–F	0.413	0.138	0.276	0.295	0.024	10.5	3.5	7.0	7.5	0.6
.33	167334*63A–F	184334*63#A>–F	0.413	0.138	0.276	0.295	0.024	10.5	3.5	7.0	7.5	0.6
.47	167474*63B–F	184474*63#B>–F	0.413	0.157	0.354	0.295	0.024	10.5	4.0	9.0	7.5	0.6
.68	167684*63C–F	184684*63#C>–F	0.413	0.197	0.433	0.295	0.024	10.5	5.0	11.0	7.5	0.6
1.00	167105*63C–F	184105*63#C>–F	0.413	0.197	0.433	0.295	0.024	10.5	5.0	11.0	7.5	0.6
100 Vdc / 63 Vac												
.033	167333*100A–F	184333*100#A>–F	0.413	0.138	0.276	0.295	0.024	10.5	3.5	7.0	7.5	0.6
.047	167473*100A–F	184473*100#A>–F	0.413	0.138	0.276	0.295	0.024	10.5	3.5	7.0	7.5	0.6
.068	167683*100A–F	184683*100#A>–F	0.413	0.138	0.276	0.295	0.024	10.5	3.5	7.0	7.5	0.6
.10	167104*100A–F	184104*100#A>–F	0.413	0.138	0.276	0.295	0.024	10.5	3.5	7.0	7.5	0.6
.12	167124*100B–F	184124*100#B>–F	0.413	0.157	0.354	0.295	0.024	10.5	4.0	9.0	7.5	0.6
.15	167154*100B–F	184154*100#B>–F	0.413	0.157	0.354	0.295	0.024	10.5	4.0	9.0	7.5	0.6
.22	167224*100C–F	184224*100#C>–F	0.413	0.197	0.433	0.295	0.024	10.5	5.0	11.0	7.5	0.6
.33	167334*100C–F	184334*100#C>–F	0.413	0.197	0.433	0.295	0.024	10.5	5.0	11.0	7.5	0.6

* Indicates capacitance tolerance: J = ±5%, K = ±10%, M = ±20%

# Indicates packaging type: R = Tape and Reel, A = Ammo Pack

> Indicates tooling code: A = 16.5 mm, B = 18.5 mm, C = 16.0 mm (See H dimension in taping specifications)

Type 167/184 Metallized Polyester Radial Lead Capacitors

Cap (µF)	Catalog Part Number	Tape & Reel Ammo Pack	Inches					Millimeters				
			L	T	H	S	Ød	L	T	H	S	Ød
250 Vdc / 160 Vac												
.010	167103*250A–F	184103*250#A>–F	0.413	0.138	0.276	0.295	0.024	10.5	3.5	7.0	7.5	0.6
.015	167153*250A–F	184153*250#A>–F	0.413	0.138	0.276	0.295	0.024	10.5	3.5	7.0	7.5	0.6
.018	167183*250A–F	184183*250#A>–F	0.413	0.138	0.276	0.295	0.024	10.5	3.5	7.0	7.5	0.6
.022	167223*250A–F	184223*250#A>–F	0.413	0.138	0.276	0.295	0.024	10.5	3.5	7.0	7.5	0.6
.027	167273*250B–F	184273*250#B>–F	0.413	0.157	0.354	0.295	0.024	10.5	4.0	9.0	7.5	0.6
.033	167333*250B–F	184333*250#B>–F	0.413	0.157	0.354	0.295	0.024	10.5	4.0	9.0	7.5	0.6
.039	167393*250B–F	184393*250#B>–F	0.413	0.157	0.354	0.295	0.024	10.5	4.0	9.0	7.5	0.6
.047	167473*250B–F	184473*250#B>–F	0.413	0.157	0.354	0.295	0.024	10.5	4.0	9.0	7.5	0.6
.068	167683*250C–F	184683*250#C>–F	0.413	0.197	0.433	0.295	0.024	10.5	5.0	11.0	7.5	0.6
.100	167104*250C–F	184104*250#C>–F	0.413	0.197	0.433	0.295	0.024	10.5	5.0	11.0	7.5	0.6
400 Vdc / 200 Vac												
.0047	167472*400A–F	184472*400#A>–F	0.413	0.138	0.276	0.295	0.024	10.5	3.5	7.0	7.5	0.6
.0056	167562*400A–F	184562*400#A>–F	0.413	0.138	0.276	0.295	0.024	10.5	3.5	7.0	7.5	0.6
.0068	167682*400A–F	184682*400#A>–F	0.413	0.138	0.276	0.295	0.024	10.5	3.5	7.0	7.5	0.6
.010	167103*400A–F	184103*400#A>–F	0.413	0.138	0.276	0.295	0.024	10.5	3.5	7.0	7.5	0.6
.015	167153*400B–F	184153*400#B>–F	0.413	0.157	0.354	0.295	0.024	10.5	4.0	9.0	7.5	0.6
.022	167223*400C–F	184223*400#C>–F	0.413	0.197	0.433	0.295	0.024	10.5	5.0	11.0	7.5	0.6
.033	167333*400C–F	184333*400#C>–F	0.413	0.197	0.433	0.295	0.024	10.5	5.0	11.0	7.5	0.6
630 Vdc / 220 Vac												
.0010	167102*630A–F	184102*630#A>–F	0.413	0.138	0.276	0.295	0.024	10.5	3.5	7.0	7.5	0.6
.0015	167152*630A–F	184152*630#A>–F	0.413	0.138	0.276	0.295	0.024	10.5	3.5	7.0	7.5	0.6
.0022	167222*630A–F	184222*630#A>–F	0.413	0.138	0.276	0.295	0.024	10.5	3.5	7.0	7.5	0.6
.0033	167332*630A–F	184332*630#A>–F	0.413	0.138	0.276	0.295	0.024	10.5	3.5	7.0	7.5	0.6
.0047	167472*630B–F	184472*630#B>–F	0.413	0.157	0.354	0.295	0.024	10.5	4.0	9.0	7.5	0.6
.0068	167682*630B–F	184682*630#B>–F	0.413	0.157	0.354	0.295	0.024	10.5	4.0	9.0	7.5	0.6
.010	167103*630C–F	184103*630#C>–F	0.413	0.197	0.433	0.295	0.024	10.5	5.0	11.0	7.5	0.6
.015	167153*630D–F	184153*630#D>–F	0.413	0.236	0.472	0.295	0.024	10.5	6.0	12.0	7.5	0.6

* Indicates capacitance tolerance: J = ±5%, K = ±10%, M = ±20%
\# Indicates packaging type: R = Tape and Reel, A = Ammo Pack
\> Indicates tooling code: A = 16.5 mm, B = 18.5 mm, C = 16.0 mm (See H dimension in taping specification)

Part Numbering System for Bulk Items

167	104	K	100	A	-F
Series	Capacitance	Tolerance	Voltage	Case Code	RoHS Compliant Designator
167	392 = .0039 µF	J = ±5%	63 = 63 Vdc	A	
	103 = .01 µF	K = ±10%	100 = 100 Vdc	B	
	104 = .1 µF	M = ±20%	250 = 250 Vdc	C	
	105 = 1.0 µF		630 = 630 Vdc	D	

Type 167/184 Metallized Polyester Radial Lead Capacitors

Tape Specification - 7.5 mm Lead Spacing

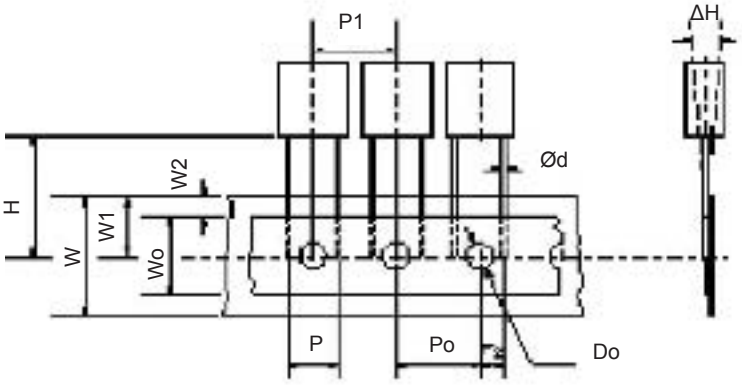

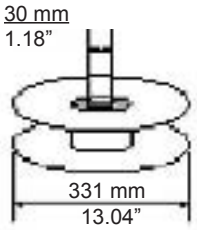

Reel Packing

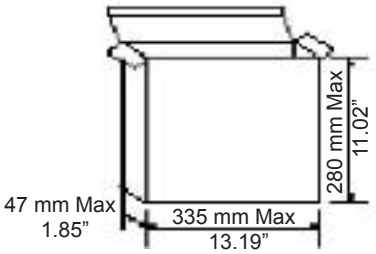

Ammo Box Packing

Item	Code	Millimeters	Inches
Lead-Wire Diameter	Ød	$0.6^{+0.04\ -0.01}$	$.024^{\pm.001}$
Lead-to-Lead Distance	P	$7.5^{+0.6\ -0.2}$	$.295^{+.024\ -.040}$
Feed Hole Pitch	P_0	$2.7^{\pm0.3}$	$.5^{\pm.012}$
Pitch of Component	P_1	$12.7^{\pm1.0}$	$.5^{\pm.039}$
Hole Center to Lead	P_2	$8.95^{\pm0.7}$	$.352^{\pm.028}$
Component Alignment, F-R	Δh	$0^{\pm2.0}$	$0^{\pm.079}$
Tape Width	W	$18^{+1.0\ -0.1}$	$.709^{+.039\ -.004}$
Hold-down Tape Width	W_0	6.0 min	.236 min
Hole Position	W_1	$9.0^{+0.75\ -0.05}$	$.355^{+.030\ -.001}$
Hold-down Tape Position	W_2	3.0 Max	.118 Max
Height of Component from Tape Center	H	>	>
Feed Hole Diameter	D_0	$4.0^{\pm0.3}$	$.157^{\pm.012}$

Case Code	Quantity Reeled	Quantity Ammo Pack
A	1800	1500
B	1500	1500
C	1200	1000
D	1000	1000

> The H dimension depends on the insertion equipment used. Specify the proper tooling code as indicated below.

Tooling Code	H Dimensions	
	Millimeters	Inches
A	$16.5^{\pm0.75}$	$.679^{\pm.030}$
B	$18.5^{\pm0.75}$	$.728^{\pm.030}$
C	$16.0^{\pm0.75}$	$.630^{\pm030}$

Part Numbering System for Auto Insertion

184	104	K	100	R	A	B	-F
Series	Capacitance	Tolerance	Voltage	Packaging Type (#)	Case Code	*Tooling Code (>)	RoHS Compliant Designator
184	392 = .0039 µF	J = ±5%	63 = 63 Vdc	A = Ammo	A	A	
	103 = .01 µF	K = ±10%	100 = 100 Vdc	R = Tape & Reel	B	B	
	104 = .1 µF	M = ±20%	250 = 250 Vdc		C	C	
	105 = 1.0 µF		630 = 630 Vdc		D		

* Tooling code is at the discretion of the user depending on the insertion equipment being used. See table for specific "H" dimensions

* Tooling code (>) depends on the users insertion equipment requirements. See table for available options.