FEATURES

* High crrent transfer ratio
  (CTR : MIN. 100% at I_F = 10mA, V_{CE} = 10V)
* Response time
  (t_{on} : TYP. 3μs at V_{CC} = 10V, I_C = 2mA, R_L = 100Ω)
* Input-output isolation voltage
  LTV-4N35 series : V_{iso} = 3,550Vrms
  LTV-4N37 series : V_{iso} = 1,500Vrms
* Dual-in-line package :
  LTV-4N35, LTV-4N37
* Wide lead spacing package :
  LTV-4N35M, LTV-4N37M
* Surface mounting package :
  LTV-4N35S, LTV-4N37S
* Tape and reel packaging :
  LTV-4N35S-TA, LTV-4N37S-TA, LTV-4N35S-TA1, LTV-4N37S-TA1
* UL approved (No. E113898)
* TUV approved (No. R9653630)
* CSA approved (No. CA91533-1)
* FIMKO approved (No. 193422-01)
* NEMKO approved (No. P96103013)
* DEMKO approved (No. 303985)
* SEMKO approved (No. 9646047 / 01-30)
* VDE approved (No. 094722)

OUTLINE DIMENSIONS

LTV-4N35 :

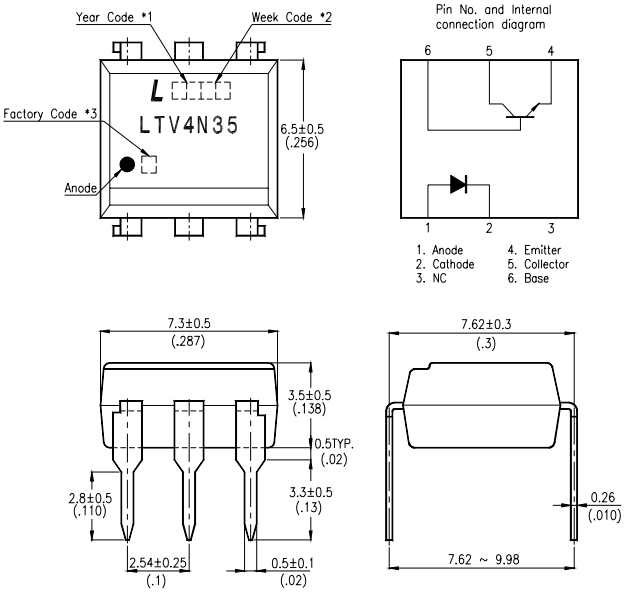

LTV-4N37 :

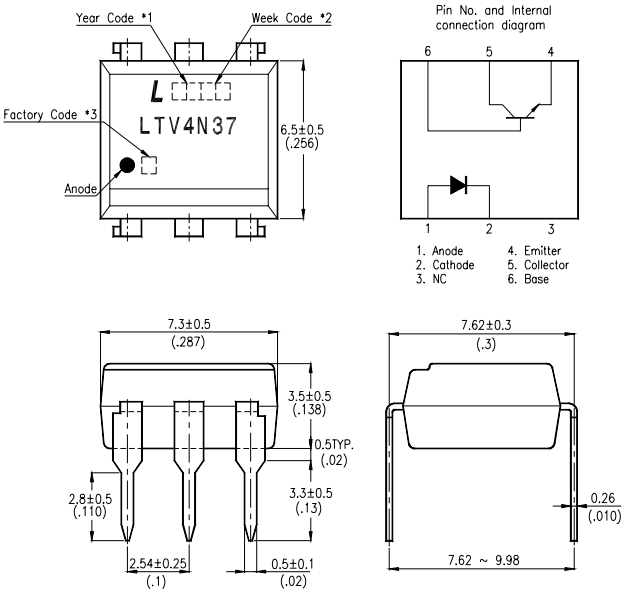

*1. Year date code.
*2. 2-digit work week.
*3. Factory identification mark shall be marked (Z : Taiwan, Y : Thailand).

OUTLINE DIMENSIONS

LTV-4N35M :

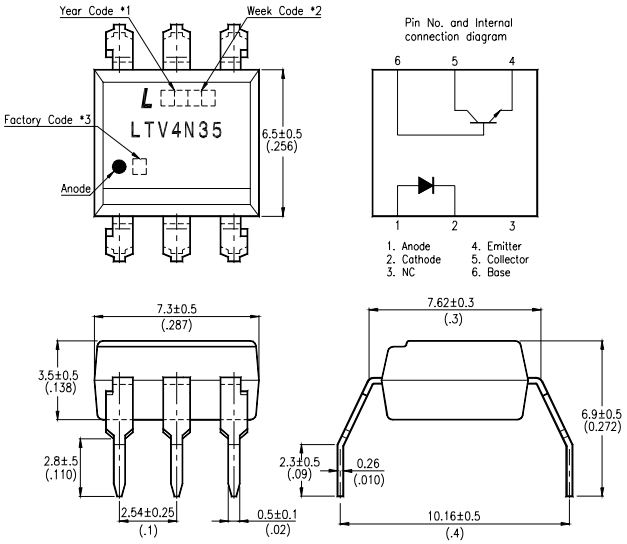

LTV-4N37M :

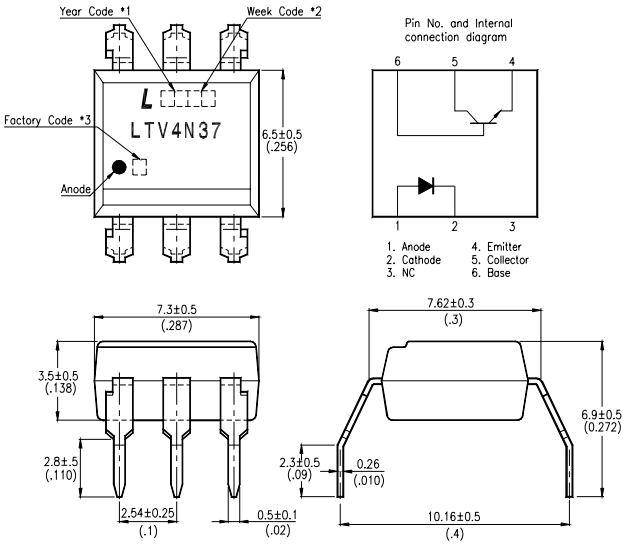

*1. Year date code.
*2. 2-digit work week.
*3. Factory identification mark shall be marked (Z : Taiwan, Y : Thailand).

OUTLINE DIMENSIONS

LTV-4N35S :

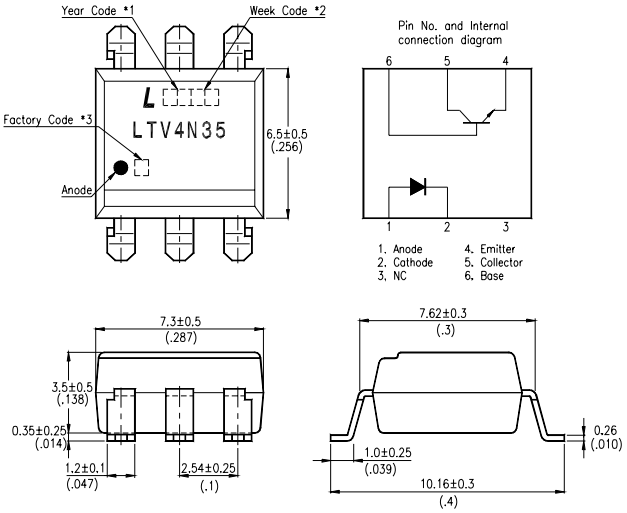

LTV-4N37S :

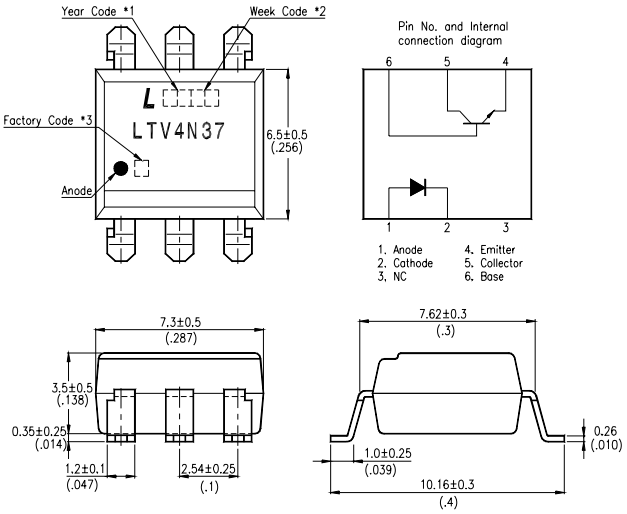

*1. Year date code.
*2. 2-digit work week.
*3. Factory identification mark shall be marked (Z : Taiwan, Y : Thailand).

TAPING DIMENSIONS

LTV-4N35S-TA , LTV-4N37S-TA :

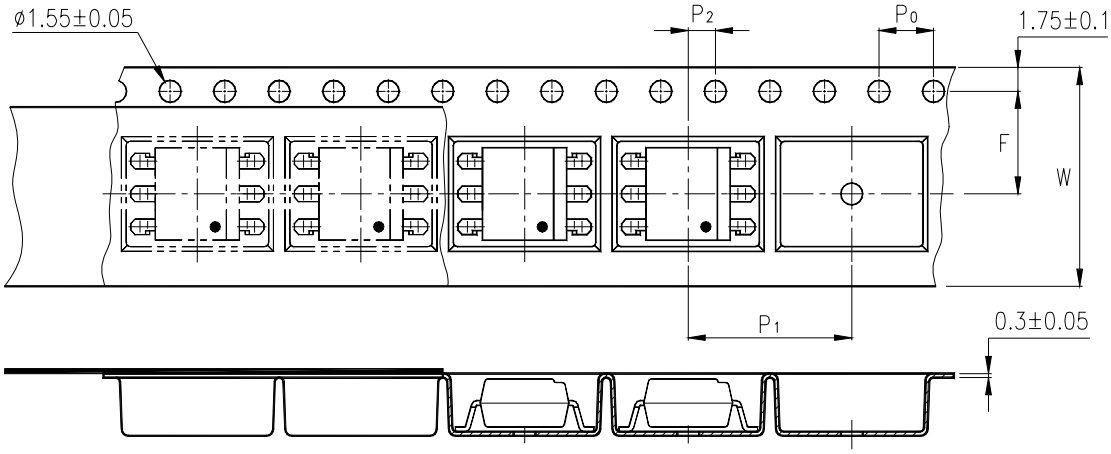

LTV-4N35S-TA1 , LTV-4N37S-TA1 :

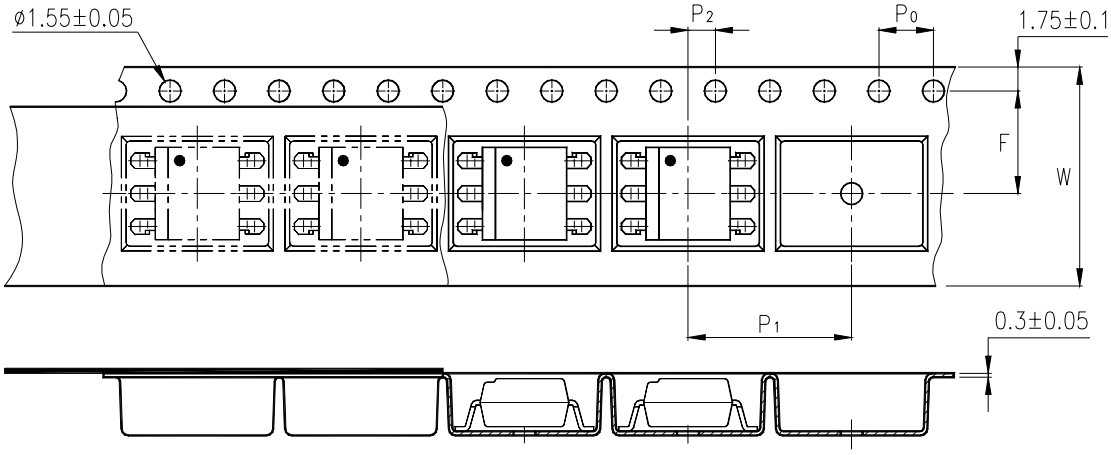

Description	Symbol	Dimensions in mm (inches)
Tape wide	W	16 ± 0.3 (.63)
Pitch of sprocket holes	P_0	4 ± 0.1 (.15)
Distance of compartment	F P_2	7.5 ± 0.1 (.295) 2 ± 0.1 (.079)
Distance of compartment to compartment	P_1	12 ± 0.1 (.472)

ABSOLUTE MAXIMUM RATING

(Ta = 25°C)

PARAMETER			SYMBOL	RATING	UNIT
INPUT	Forward Current		I_F	60	mA
	Reverse Voltage		V_R	6	V
	Power Dissipation		P	100	mW
OUTPUT	Collector - Emitter Voltage		V_{CEO}	30	V
	Emitter - Collector Voltage		V_{ECO}	7	V
	Collector - Base Voltage		V_{CBO}	70	V
	Collector Current		I_C	100	mA
	Collector Power Dissipation		P_C	300	mW
Total Power Dissipation			P_{tot}	350	mW
*1 Isolation Voltage		LTV-4N35 series	V_{iso}	3,550	Vrms
		LTV-4N37 series		1,500	
Operating Temperature			T_{opr}	-55 ~ +100	°C
Storage Temperature			T_{stg}	-55 ~ +150	°C
*2 Soldering Temperature			T_{sol}	260	°C

*1. AC For 1 Minute, R.H. = 40 ~ 60%

Isolation voltage shall be measured using the following method.

(1) Short between anode and cathode on the primary side and between collector, emitter and base on the secondary side.

(2) The isolation voltage tester with zero-cross circuit shall be used.

(3) The waveform of applied voltage shall be a sine wave.

*2. For 10 Seconds

ELECTRICAL - OPTICAL CHARACTERISTICS

(Ta = 25°C)

PARAMETER			SYMBOL	MIN.	TYP.	MAX.	UNIT	CONDITIONS
INPUT	Forward Voltage		V_F	—	1.2	1.5	V	I_F=10mA
	Reverse Current		I_R	—	—	10	μA	V_R=4V
	Terminal Capacitance		C_t	—	50	—	pF	V=0, f=1KHz
OUTPUT	Collector Dark Current	Ta=25°C	I_{CEO}	—	—	50	nA	V_{CE}=10V, I_F=0
		Ta=100°C		—	—	500	μA	V_{CE}=30V, I_F=0
	Collector-Emitter Breakdown Voltage		BV_{CEO}	30	—	—	V	I_C=0.1mA I_F=0
	Emitter-Collector Breakdown Voltage		BV_{ECO}	7	—	—	V	I_E=10μA I_F=0
	Collector-Base Breakdown Voltage		BV_{CBO}	70	—	—	V	I_C=0.1mA I_F=0
TRANSFER CHARACTERISTICS	Collector Current		I_C	10	—	—	mA	I_F=10mA V_{CE}=10V
	* Current Transfer Ratio		CTR	100	—	—	%	
	Collector-Emitter Saturation Voltage		$V_{CE(sat)}$	—	—	0.3	V	I_F=50mA I_C=2mA
	Isolation Resistance		R_{iso}	5×10^{10}	1×10^{11}	—	Ω	DC500V 40 ~ 60% R.H.
	Floating Capacitance		C_f	—	1	2.5	pF	V=0, f=1MHz
	Response Time (Turn-on)		t_{on}	—	3	10	μs	V_{CC}=10V, I_C=2mA R_L=100Ω
	Response Time (Turn-off)		t_{off}	—	3	10	μs	

$$* \ CTR = \frac{I_C}{I_F} \times 100\%$$

CHARACTERISTICS CURVES

Fig.1 Forward Current vs. Ambient Temperature

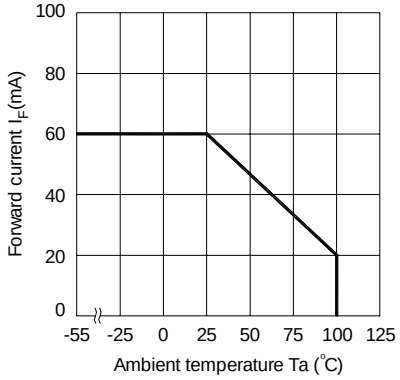

Fig.2 Collector Power Dissipation vs. Ambient Temperature

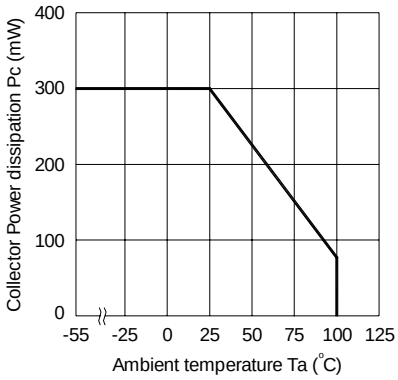

Fig.3 Forward Current vs. Forward Voltage

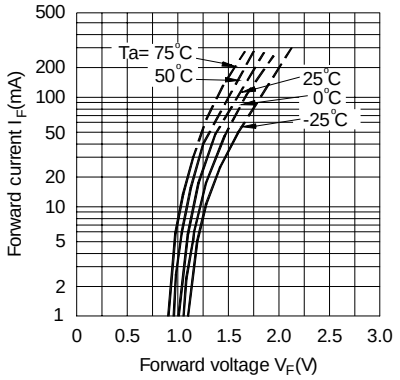

Fig.4 Current Transfer Ratio vs. Forward Current

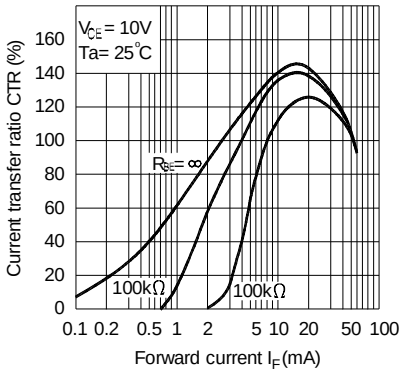

Fig.5 Collector Current vs. Collector-emitter Voltage

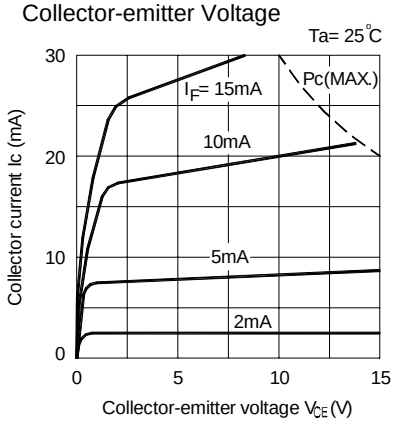

Fig.6 Relative Current Transfer Ratio vs. Ambient Temperature

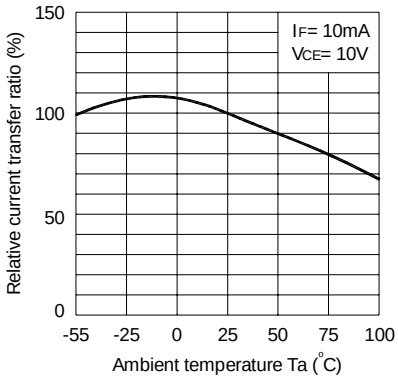

CHARACTERISTICS CURVES

Fig.7 Collector-emitter Saturation Voltage vs. Ambient Temperature

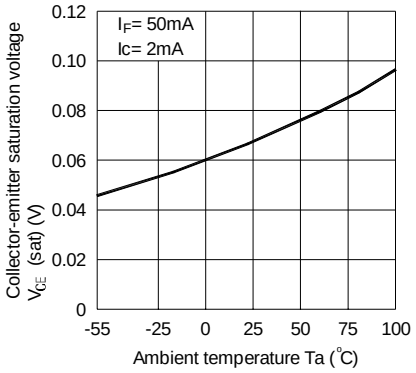

Fig.8 Collector Dark Current vs. Ambient Temperature

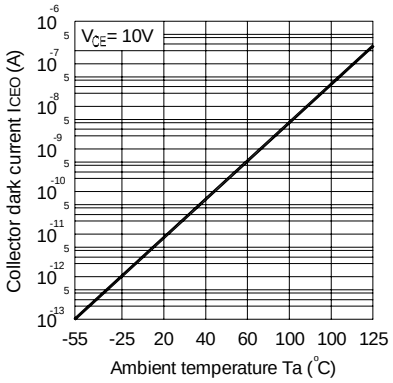

Fig.9 Response Time vs. Load Resistance

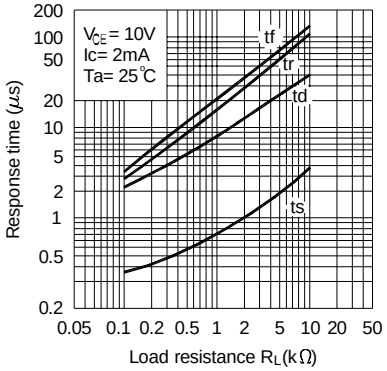

Fig.10 Frequency Response

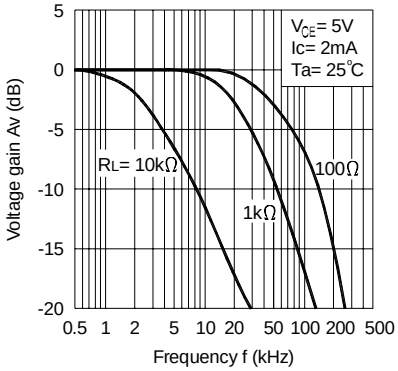

Fig.11 Collector-emitter Saturation Voltage vs. Forward Current

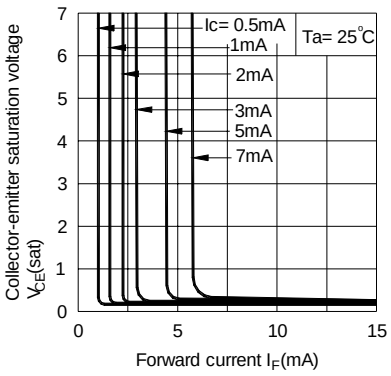

Test Circuit for Response Time

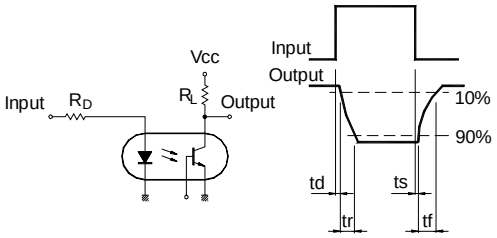
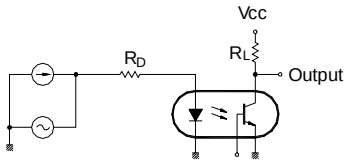
Test Circuit for Frequency Response