REV	DESCRIPTION	BY DATE	APPD
M	REVISED PER ECR-ER1364	PSM 09/09/05	V.B.H.

SPECIFICATIONS

NOTES:

1. CATALOG NUMBER CODE: NJ SERIES CODE ORDER CHART

NJ◪ ✳✳ C◺◐△

STEP 1 STYLE

◪ CODE	DESCRIPTION
(BLANK)	NO OPEN END
S	ONE OPEN END

STEP 2 № OF CONTACTS PAIRS

(POSITION) SEE SHEET 2

STEP 3 GRID SPACING

.100 X .200 / 2.54 X 5.08

STEP 4 CARD SLOT DEPTH

◺ CODE	G	
1	.415 / 10.54	STANDARD
2	.350 / 8.89	6
3	.300 / 7.62	

STEP 5 TAIL LENGTH

◺ CODE	F	J
1	.189 / 4.80	.025 / 0.64
2	.480 / 12.19	.316 / 8.03
3	.575 / 14.61	.411 / 10.44
4	.707 / 17.96	.543 / 13.79
5	.805 / 20.45	.641 / 16.28
6	.370 / 9.40	.206 / 5.23

STEP 6 PLATING: SEE SELECTIVE PLATING CHART

2 "WIN. EL." CATALOG №, DATE CODE, & MANUFACTURING LOCATION CODE LOCATED APPROXIMATELY AS SHOWN ON SURFACE INDICATED.

3 FOR CUT & BUTT ASSEMBLY, SEE DRAWING № 27362 FOR ASSEMBLY INSTRUCTIONS INTO P.C. BOARD.

4 THESE DIMENSIONS APPLY AFTER PRESSED INTO P.C. BOARD.

5 THIS DIMENSION TAKEN FROM TOP OF P.C. BOARD

6 THIS DIMENSION IS FOR CARD SLOT DEPTH OPTIONS 2 & 3 ONLY. FOR BOTH ENDS OF INSULATOR.

MATERIALS

1. Insulator — Thermoplastic Polyester, glass filled Color: Natural
2. Contacts — Copper Nickel Tin Alloy
3. Polarizing Key — Nylon, glass filled Color: Black Order Under Cat № 109-101665
4. Contact Tip Control Strip —

SELECTIVE PLATING CHART

△ CODE	CONTACT AREA	C-PRESS COMPLIANT SECTION & TAIL
192	.000030 / 0.00076 MIN GOLD OVER .000050 / 0.00127 MICROINCHES MIN NICKEL UNDERPLATE	.000050 / 0.00127 MIN TIN-LEAD
195	.000030 / 0.00076 MIN GOLD OVER .000050 / 0.00127 MICROINCHES MIN NICKEL UNDERPLATE	GOLD FLASH
792	.000030 / 0.00076 MIN GOLD OVER .000050 / 0.00127 MICROINCHES MIN NICKEL UNDERPLATE	.000020 / 0.00060 MIN PURE TIN (RoHS)

(CONSULT SALES FOR ADDITIONAL PLATING OPTIONS)

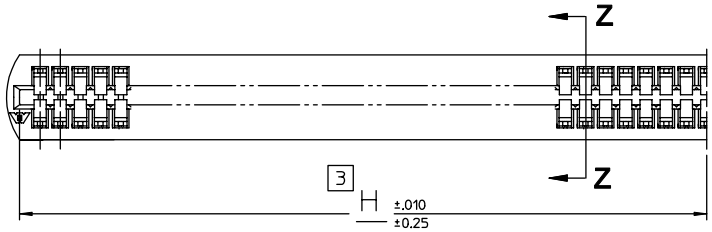

CATALOG № NJS34C◺◐△ SHOWN

OPEN END DESIGN "S"
SAME AS NJ34C◺◐△ EXCEPT AS SHOWN

PER ANSI Y14.5M-1982
UNLESS OTHERWISE SPECIFIED:
DIMENSIONS ARE IN INCHES OR INCHES/MM
MM
TOLERANCES:
DECIMALS: .XX ± .02/0.5
.XXX ± .007/0.18
ANGLES: ± 5° SCALE: 2:1

WinchesterElectronics
Winchester Electronics Corporation
62 Barnes Industrial Road North
Wallingford, Connecticut 06492

CUSTOMER DRAWING

TITLE: EDGECARD, CONTINUOUS CARD COLLECTOR

DRAWN	DATE	APPROVED	DATE
JOE R.	01/15/85	H.R.	10/03/85
APPROVED R.G.H.	11/10/85	APPROVED	DATE

C | 24512 | SHT. 1 OF 3 | REV. M

June 2006 - This drawing became the property of Winchester Electronics Corporation, Wallingford, CT.

REV	DESCRIPTION	BY DATE	APPD
M	REVISED PER ECR-ER1364	CWB 09/12/06	CWB

61	60	6.000 / 152.40	6.204 / 157.58	6.334 / 160.88	6.097 / 154.86
60	59	5.900 / 149.86	6.104 / 155.04	6.234 / 158.34	5.997 / 152.32
59	58	5.800 / 147.32	6.004 / 152.50	6.134 / 155.76	5.897 / 149.78
58	57	5.700 / 144.78	5.904 / 149.96	6.034 / 153.22	5.797 / 147.24
57	56	5.600 / 142.24	5.804 / 147.42	5.934 / 150.68	5.697 / 144.70
56	55	5.500 / 139.70	5.704 / 144.88	5.834 / 148.14	5.597 / 142.16
55	54	5.400 / 137.16	5.604 / 142.34	5.734 / 145.60	5.497 / 139.62
54	53	5.300 / 134.62	5.504 / 139.80	5.634 / 143.06	5.397 / 137.08
53	52	5.200 / 132.08	5.404 / 137.26	5.534 / 140.52	5.297 / 134.54
52	51	5.100 / 129.54	5.304 / 134.72	5.434 / 137.98	5.197 / 132.00
51	50	5.000 / 127.00	5.204 / 132.18	5.334 / 135.44	5.097 / 129.46
50	49	4.900 / 124.46	5.104 / 129.64	5.234 / 132.90	4.997 / 126.92
49	48	4.800 / 121.92	5.004 / 127.10	5.134 / 130.36	4.897 / 124.38
48	47	4.700 / 119.38	4.904 / 124.56	5.034 / 127.82	4.797 / 121.84
47	46	4.600 / 116.84	4.804 / 122.02	4.934 / 125.28	4.697 / 119.30
46	45	4.500 / 114.30	4.704 / 119.48	4.834 / 122.74	4.597 / 116.76
45	44	4.400 / 111.76	4.604 / 116.94	4.734 / 120.20	4.497 / 114.22
44	43	4.300 / 109.22	4.504 / 114.40	4.634 / 117.66	4.397 / 111.68
43	42	4.200 / 106.68	4.404 / 111.86	4.534 / 115.12	4.297 / 109.14
42	41	4.100 / 104.14	4.304 / 109.32	4.434 / 112.58	4.197 / 106.60
41	40	4.000 / 101.60	4.204 / 106.78	4.334 / 110.04	4.097 / 104.06
40	39	3.900 / 99.06	4.104 / 104.24	4.234 / 107.50	3.997 / 101.52
39	38	3.800 / 96.52	4.004 / 101.70	4.134 / 104.96	3.897 / 98.98
38	37	3.700 / 93.98	3.904 / 99.16	4.034 / 102.42	3.797 / 96.44
37	36	3.600 / 91.44	3.804 / 96.62	3.934 / 99.88	3.697 / 93.90
36	35	3.500 / 88.90	3.704 / 94.08	3.834 / 97.34	3.597 / 91.36
35	34	3.400 / 86.36	3.604 / 91.54	3.734 / 94.80	3.497 / 88.82
34	33	3.300 / 83.82	3.504 / 89.00	3.634 / 92.26	3.397 / 86.28
33	32	3.200 / 81.28	3.404 / 86.46	3.534 / 89.72	3.297 / 83.74
32	31	3.100 / 78.74	3.304 / 83.92	3.434 / 87.18	3.197 / 81.20
31	30	3.000 / 76.20	3.204 / 81.38	3.334 / 84.68	3.097 / 78.66
30	29	2.900 / 73.66	3.104 / 78.84	3.234 / 82.14	2.997 / 76.12
29	28	2.800 / 71.12	3.004 / 76.30	3.134 / 79.60	2.897 / 73.58
28	27	2.700 / 68.58	2.904 / 73.76	3.034 / 77.06	2.797 / 71.04
27	26	2.600 / 66.04	2.804 / 71.22	2.934 / 74.52	2.697 / 68.50
26	25	2.500 / 63.50	2.704 / 68.68	2.834 / 71.98	2.597 / 65.96
25	24	2.400 / 60.96	2.604 / 66.14	2.734 / 69.44	2.497 / 63.42
24	23	2.300 / 58.42	2.504 / 63.60	2.634 / 66.90	2.397 / 60.88
23	22	2.200 / 55.88	2.404 / 61.06	2.534 / 64.36	2.297 / 58.34
22	21	2.100 / 53.34	2.304 / 58.52	2.434 / 61.82	2.197 / 55.80
21	20	2.000 / 50.80	2.204 / 55.98	2.334 / 59.28	2.097 / 53.26
20	19	1.900 / 48.26	2.104 / 53.44	2.234 / 56.74	1.997 / 50.72
19	18	1.800 / 45.72	2.004 / 50.90	2.134 / 54.20	1.897 / 48.18
18	17	1.700 / 43.18	1.904 / 48.36	2.034 / 51.66	1.797 / 45.64
17	16	1.600 / 40.64	1.804 / 45.82	1.934 / 49.12	1.697 / 43.10
16	15	1.500 / 38.10	1.704 / 43.28	1.834 / 46.58	1.597 / 40.56
15	14	1.400 / 35.56	1.604 / 40.74	1.734 / 44.04	1.497 / 38.02
10	9	.900 / 22.86	1.104 / 28.04	1.234 / 31.34	.997 / 25.32
Nº OF CONTACT PAIRS STEP 2	A	B	C	D	H

PER ANSI Y14.5M-1982
UNLESS OTHERWISE SPECIFIED:
DIMENSIONS ARE IN INCHES OR INCHES/MM
MM
TOLERANCES:
DECIMALS: .XX ± .02/0.5
.XXX ± .007/0.18
ANGLES: ± 5° SCALE:2:1

CUSTOMER DRAWING

DRAWN	DATE	APPROVED	DATE
BAS	10/20/98	WPM	10/22/98
APPROVED	DATE	APPROVED	DATE

Winchester Electronics
Winchester Electronics Corporation
62 Barnes Industrial Road North
Wallingford, Connecticut 06492

TITLE
EDGECARD, CONTINUOUS CARD COLLECTOR

C | 24512 | SHT. 2 OF | REV. M

June 2006 - This drawing became the property of Winchester Electronics Corporation, Wallingford, CT.

REV	DESCRIPTION	BY DATE	APPD
M	REVISED PER ECR-ER1364	CWB 09/12/06	CWB

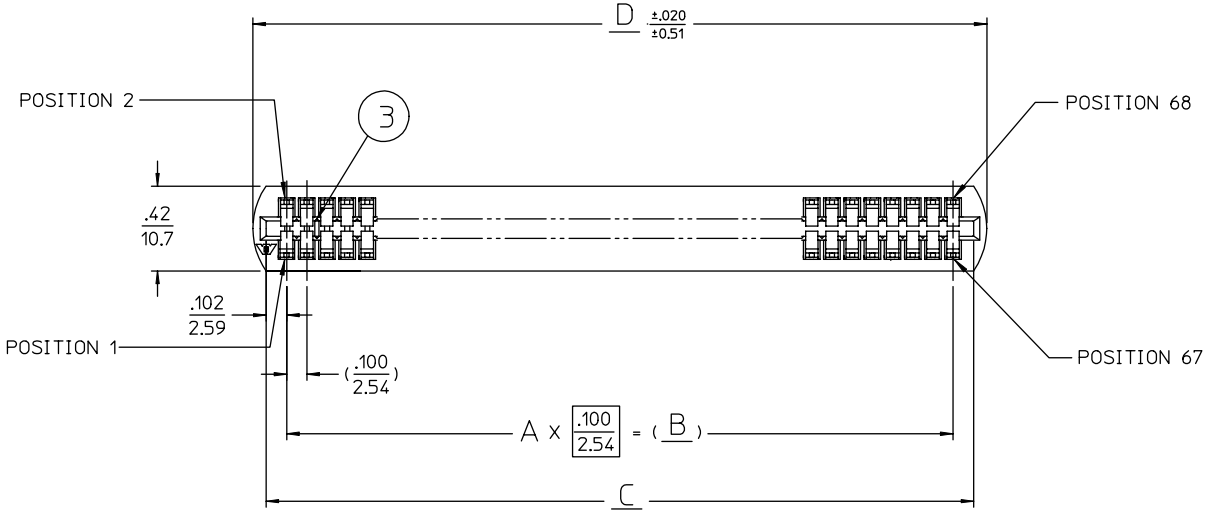

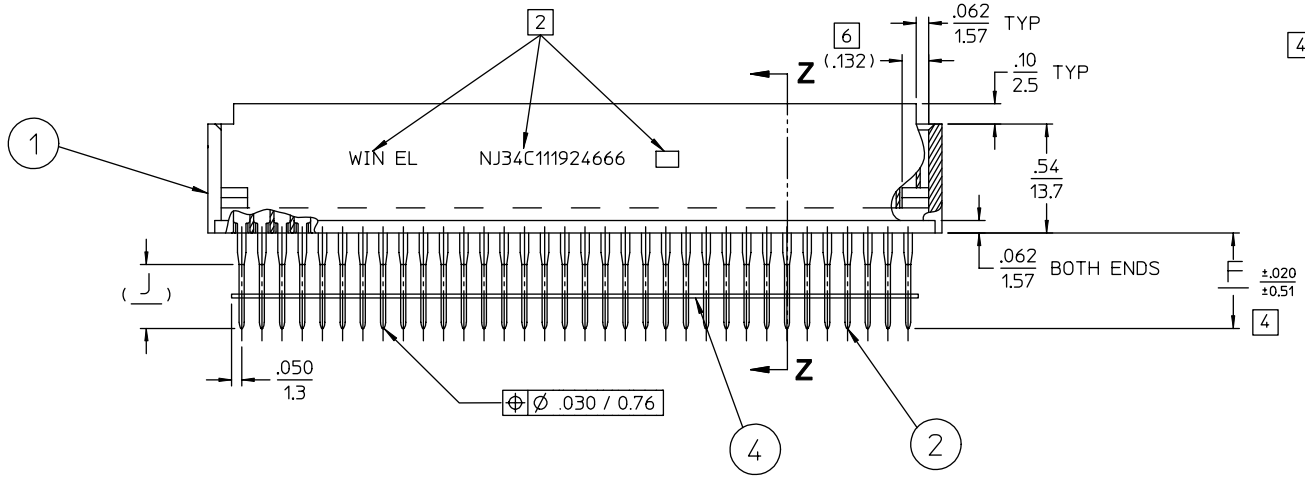

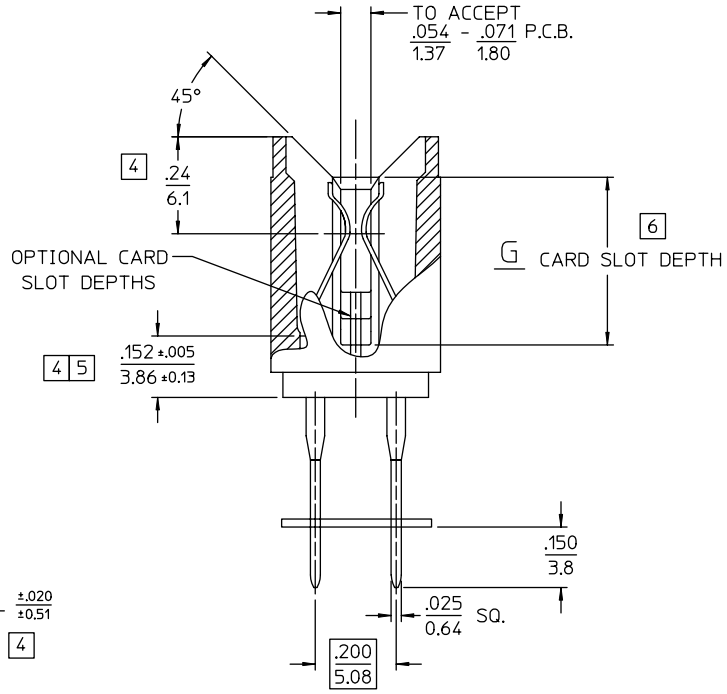

PARTIAL SECTION Z-Z

AT STANDARD CONTACTS TYP
SCALE 4:1

CATALOG № NJ◪34C◺◐△ SHOWN

PER ANSI Y14.5M-1982
UNLESS OTHERWISE SPECIFIED:
DIMENSIONS ARE IN INCHES OR INCHES/MM
MM
TOLERANCES:
DECIMALS: .XX ± .02/0.5
.XXX ± .007/0.18
ANGLES: ± 5° SCALE: 2:1

CUSTOMER DRAWING

DRAWN	DATE	APPROVED	DATE
BAS	10/20/98	WPM	10/22/98
APPROVED	DATE	APPROVED	DATE

Winchester Electronics
Winchester Electronics Corporation
62 Barnes Industrial Road North
Wallingford, Connecticut 06492

TITLE
EDGECARD, CONTINUOUS CARD COLLECTOR

C | 24512 | SHT. 3 OF | REV. M

June 2006 - This drawing became the property of Winchester Electronics Corporation, Wallingford, CT.