This document was generated on 05/18/2010

PLEASE CHECK WWW.MOLEX.COM FOR LATEST PART INFORMATION

Part Number: 0015474077
Status: Active
Overview: cgrid__sl_products
Description: 2.54mm (.100") C-Grid SL™ Single Row, Female, Version G Receptacle, 7 Circuits

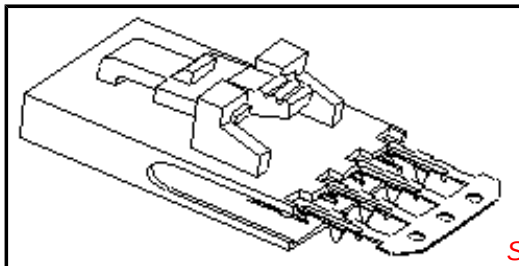

Series image - Reference only

Documents:

3D Model
Drawing (PDF)
Product Specification PS-70430 (PDF)
RoHS Certificate of Compliance (PDF)

Agency Certification

CSA	LR19880
UL	E29179

General

Product Family	FFC/FPC Connectors
Series	70430
Overview	cgrid__sl_products
Product Name	SL™

Physical

Circuits (Loaded)	7
Color - Resin	Black
Contact Position	N/A
Durability (mating cycles max)	50
Entry Angle	Vertical
Flammability	94V-0
Material - Metal	Phosphor Bronze
Material - Plating Mating	Gold
Material - Plating Termination	Tin
Material - Resin	Polyester Alloy
Number of Rows	1
Orientation	Vertical
PC Tail Length (in)	0.130 In
PC Tail Length (mm)	3.30 mm
PCB Retention	None
PCB Thickness Recommended (in)	0.062 In, 0.093 In
PCB Thickness Recommended (mm)	1.60 mm, 2.40 mm
Packaging Type	Tube
Pitch - Mating Interface (in)	0.100 In
Pitch - Mating Interface (mm)	2.54 mm
Pitch - Term. Interface (in)	0.100 In
Pitch - Term. Interface (mm)	2.54 mm
Plating min: Mating (µin)	30
Plating min: Mating (µm)	0.75
Plating min: Termination (µin)	75
Plating min: Termination (µm)	1.875
Polarized to PCB	N/A
Stackable	Yes
Temperature Range - Operating	-40°C to +105°C
Termination Interface: Style	IDT or Pierce
Wire/Cable Type	FFC/FPC

Electrical

Current - Maximum per Contact	1A, 2A
Voltage - Maximum	250V

Material Info

EU RoHS
ELV and RoHS Compliant
REACH SVHC
Contains SVHC: No
Halogen-Free Status
Not Reviewed

China RoHS

Need more information on product environmental compliance?

Email productcompliance@molex.com
For a multiple part number RoHS Certificate of Compliance, click here

Please visit the Contact Us section for any non-product compliance questions.

Search Parts in this Series
70430Series

Mates With
C-Grid® locking headers and panel mounts

Application Tooling | **FAQ**

Tooling specifications and manuals are found by selecting the products below. Crimp Height Specifications are then contained in the Application Tooling Specification document.

Global

Description	Product #
Manual Ribbon Cable Cutter Hand Tool	0638170100
Tool Kit for Standard Manual Press FFC	0622007400
Standard Manual Press for FFC	0622007800
TM-42™ FFC and SL™ Termination Kit	0622018700
TM-42™ FFC and SL™ Press and Termination Kit for 110v applications	0622020800

Old Part Number	70430-0496

Reference - Drawing Numbers

Product Specification	PS-70430
Sales Drawing	SDA-70430-0491-0514

This document was generated on 05/18/2010

PLEASE CHECK WWW.MOLEX.COM FOR LATEST PART INFORMATION

"G" - OPTION

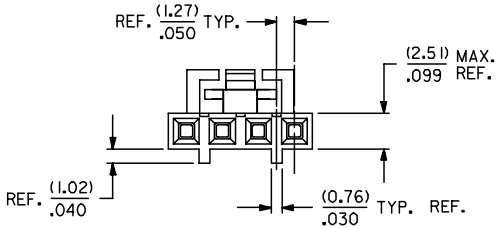

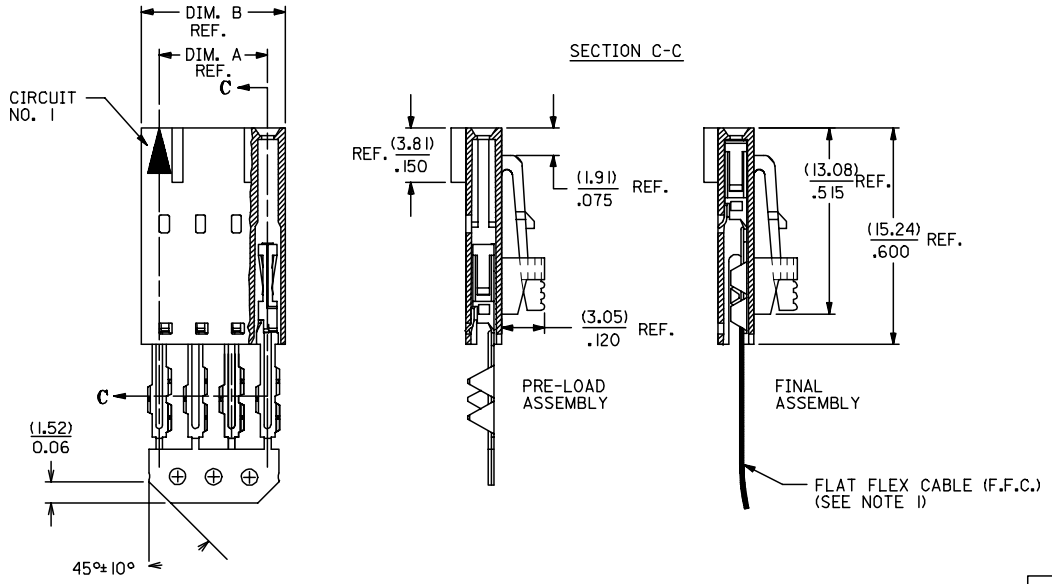

NOTES:

1) PRE LOADED ASSEMBLY TO BE USED WITH (0.30)/.012 MAX. THICK FLAT FLEX CABLE WITH (1.57)/.062 WIDE COPPER CONDUCTORS ON (2.54)/.100 CENTERS OR, (0.13)/.005 - (0.28)/.011 THICK MYLAR WITH (1.02)/.040 - (1.65)/.065 WIDE SILVER INK CONDUCTORS ON (2.54)/.100 CENTERS.
2) STANDARD PACKING PER PK70873-0001 SHALL BE USED.
3) SEE CHART FOR CIRCUIT SIZES, "A" AND "B" DIMENSIONS.
4) TWO (2) CIRCUIT ASSEMBLIES SUPPLIED AS GROUPED PAIRS.
5) PART MATES WITH (0.64)/.025 SQ. PINS, (8.13)/.320 TO (5.08)/.200 LONG ON (2.54)/.100 CENTERS.
6) REFER TO SDA-70430-**** (SHEET 3) FOR MINOR VARIATIONS TO "G" OPTION HOUSINGS.
7) PARTS CONFORM TO CLASS B OF COSMETIC SPECIFICATION PS-45499-002.

CKT. SIZE	EDP. NO.	ENG. NO.	A	B
2	015-47-4027	70430-0491	(2.54) .100	(5.05) .199
3	015-47-4037	70430-0492	(5.08) .200	(7.59) .299
4	015-47-4047	70430-0493	(7.62) .300	(10.13) .399
5	015-47-4057	70430-0494	(10.16) .400	(12.67) .499
6	015-47-4067	70430-0495	(12.70) .500	(15.21) .599
7	015-47-4077	70430-0496	(15.24) .600	(17.75) .699
8	015-47-4087	70430-0497	(17.78) .700	(20.29) .799
9	015-47-4097	70430-0498	(20.32) .800	(22.83) .899
10	015-47-4107	70430-0499	(22.86) .900	(25.37) .999
11	015-47-4117	70430-0500	(25.40) 1.000	(27.91) 1.099
12	015-47-4127	70430-0501	(27.94) 1.100	(30.45) 1.199
13	015-47-4137	70430-0502	(30.48) 1.200	(32.99) 1.299
14	015-47-4147	70430-0503	(33.02) 1.300	(35.53) 1.399
15	015-47-4157	70430-0504	(35.56) 1.400	(38.07) 1.499
16	015-47-4167	70430-0505	(38.10) 1.500	(40.61) 1.599
17	015-47-4177	70430-0506	(40.64) 1.600	(43.15) 1.699
18	015-47-4187	70430-0507	(43.18) 1.700	(45.69) 1.799
19	015-47-4197	70430-0508	(45.72) 1.800	(48.23) 1.899
20	015-47-4207	70430-0509	(48.26) 1.900	(50.77) 1.999
21	015-47-4217	70430-0510	(50.80) 2.000	(53.31) 2.099
22	015-47-4227	70430-0511	(53.34) 2.100	(55.85) 2.199
23	015-47-4237	70430-0512	(55.88) 2.200	(58.39) 2.299
24	015-47-4247	70430-0513	(58.42) 2.300	(60.93) 2.399
25	015-47-4257	70430-0514	(60.96) 2.400	(63.47) 2.499

HOUSING MATERIAL: GLASS FILLED POLYESTER, UL 94V-0.
TERMINAL MATERIAL: PHOSPHOR BRONZE
PLATING: 30 GOLD - .000030 MINIMUM GOLD PLATE IN SELECT AREA,
.000075 MINIMUM TIN PLATE IN SELECT AREA,
.000050 MINIMUM NICKEL PLATE OVER-ALL.

CONTACT PLATING	COLOR CODE
TIN	NONE
15 GOLD	YELLOW
30 GOLD	RED

ADD TOLERANCE
EC NO: UCP2007-2849 2007/05/18
DRWN:DMORGAN 2007/05/21
CH'KD:MS1 BARRA
APPR:SMILLER 2007/05/21
REV DESCRIPTION

QUALITY SYMBOLS
▼=0
▽=0

GENERAL TOLERANCES (UNLESS SPECIFIED)

	mm	INCH
4 PLACES	± ---	± ---
3 PLACES	± ---	± .010
2 PLACES	± 0.25	± .015
1 PLACE	± 0.38	± ---
ANGULAR ±1/2°		

DRAFT WHERE APPLICABLE MUST REMAIN WITHIN DIMENSIONS

DIMENSION STYLE: MM/IN
SCALE: 4:1
DESIGN UNITS: INCH
THIRD ANGLE PROJECTION

DRAWN BY	RAS
DATE	1986/07/21
CHECKED BY	MJM
DATE	1986/07/21
APPROVED BY	WAZ
DATE	1986/07/21

TITLE: ASSEMBLY, CONNECTOR FFC FEMALE SINGLE ROW (2.54)/.100 GRID

MOLEX INCORPORATED

MATERIAL NO.: SEE TABLE
DOCUMENT NO.: SDA-70430-0491-0514
SHEET NO.: 1 OF 1
SIZE: C

THIS DRAWING CONTAINS INFORMATION THAT IS PROPRIETARY TO MOLEX INCORPORATED AND SHOULD NOT BE USED WITHOUT WRITTEN PERMISSION