REVISION HISTORY			
REV	AUTH	DATE	DESCRIPTION
A	-	1/18/2008	INITIAL RELEASE

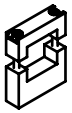

X-SMALL MOUNT

APPLICATIONS:

75-440-X
62-440-X
51-440-X
42-440-X
34-440-X
28-440-X
28-441-X

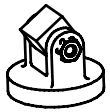

SMALL MOUNT

APPLICATIONS:

650-440-X
430-440-X
340-440-X
340-441-X
284-440-X
284-441-X
229-440-X
229-441-X
187-440-X
187-441-X
187-442-X
159-440-X
159-441-X
159-442-X
137-440-X
137-441-X
137-442-X
112-440-X
112-441-X
102-440-X
102-441-X
102-449-X/17
102-442-X
90-440-X
90-441-X
90-442-X
75-441-X
75-442-X
62-441-X
62-449-X/17.5
62-442-X
62-449-X/24
51-441-X
51-442-X
42-441-X
42-442-X
42-449-X/24
34-441-X
34-442-X
28-442-X
28-449-X/24

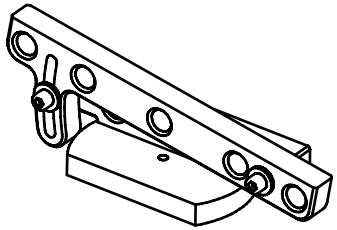

MEDIUM MOUNT

APPLICATIONS:

430-441-X
229-442-X
112-449-X/24
90-449-X/24

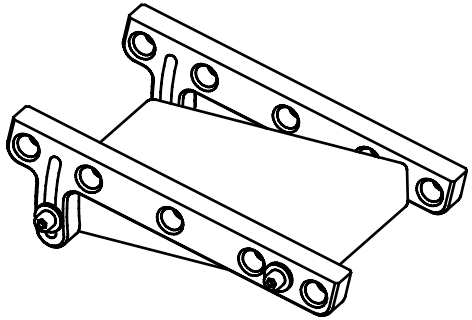

LARGE MOUNT

APPLICATIONS:

650-441-X
430-442-X
340-442-X
284-442-X

THIRD ANGLE PROJECTION:			APPROVALS	DATE
UNLESS OTHERWISE NOTED, DIMENSIONS ARE IN INCHES, TOLERANCES ARE: FRACTIONS: ±1/64 ANGLES: ±1/2°			DRAWN M.R.	
			CHKD.	
BASIC DIMENSION	DECIMALS 2 PLACE	3 PLACE	APRVD.	
UNDER 6"	±.02	±.005	MATERIAL -	
6" – 12"	±.03	±.010	TREATMENT -	
OVER 12"	±.06	±.015	FINISH -	

ADVANCED TECHNICAL MATERIALS, INC.
TEL: (631) 289-0363 FAX: (631) 289-0358
www.atmmicrowave.com

THE INFORMATION IN THIS DRAWING IS PROPRIETARY AND SHALL NOT BE USED OR DISCLOSED WITHOUT THE PRIOR WRITTEN CONSENT OF ATM, INC.
DO NOT SCALE DWG.

HORN MOUNT APPLICATIONS

SIZE	CAGE CODE	ATM DWG #	REVISION
A	0R8N4	7994	A
MODEL # XXX-44X-X			SHEET 1